PAPER • OPEN ACCESS

Effective way to reconstruct arch bridges using concrete walls and transverse strands

To cite this article: Ladislav Klusáek *et al* 2017 *IOP Conf. Ser.: Mater. Sci. Eng.* **236** 012058

View the article online for updates and enhancements.

Related content

- A numerical procedure for failure mode detection of masonry arches reinforced with fiber reinforced polymeric materials
  S Galassi
- Jobs masonry in LHCb with elastic Grid Jobs
  F Stagni and Ph Charpentier
- Resonance Conversion as the Effective Way of Triggering the ^{178m2}Hf Isomer Energy
  F. Feodor Karpeshin, M. B. Trzhaskovskaya and Zhang Jing-Bo

IOP ebooks™

Bringing you innovative digital publishing with leading voices to create your essential collection of books in STEM research.

Start exploring the collection - download the first chapter of every title for free.

This content was downloaded from IP address 147.229.6.155 on 06/12/2018 at 13:46

IOP Conf. Series: Materials Science and Engineering **236** (2017) 012058 doi:10.1088/1757-899X/236/1/012058

Effective way to reconstruct arch bridges using concrete walls and transverse strands

Ladislav Klusáček[1], Robin Pěkník[1] and Radim Nečas[1]

[1]Brno University of Technology – Faculty of Civil Engineering, Veveří 95, 602 00, Brno, Czech Republic

E-mail: klusacek.l@fce.vutbr.cz

Abstract. There are more than 500 masonry arch bridges in the Czech Road system and about 2500 in the Czech Railway system. Many of them are cracked in the longitudinal (span) direction. The barrel vaults are separated by the cracks into partial masonry arches without load bearing connection in transverse direction. These constructions are about 150 years old and they are also too narrow for the current road system. This paper presents a strengthening method for masonry arch bridges using transverse post-tensioning. This method is very useful not only for strengthening in the transverse direction, but widening of masonry arches can be taken as secondary effect especially in case of road bridges. Several bridges were successfully repaired with the use of this system which seems to be effective and reliable.

1. Failures of the arch bridges in the longitudinal direction

Some masonry arch bridges were built with cylindrical vaults. The type of vault is usually a half of the circle or a part of the circle in the longitudinal direction. For calculation of their load bearing capacity a simple frame model is used (Figure 1). There are only normal forces and bending moments acting on the cross section. There are no forces in the transverse direction in this case. But real vaults are separated by cracks in the longitudinal direction creating more sections (Figure 2). These cracks are typically situated in the central area of the vaults. They are also situated near the left and right edges in a distance about 1.5 m.

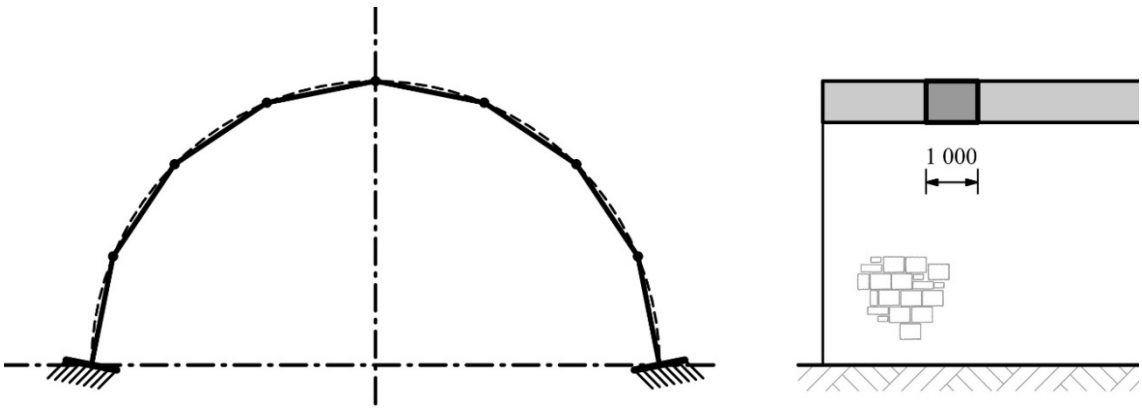

Figure 1. Frame model of a masonry cylindrical vault.

Content from this work may be used under the terms of the Creative Commons Attribution 3.0 licence. Any further distribution of this work must maintain attribution to the author(s) and the title of the work, journal citation and DOI.
Published under licence by IOP Publishing Ltd

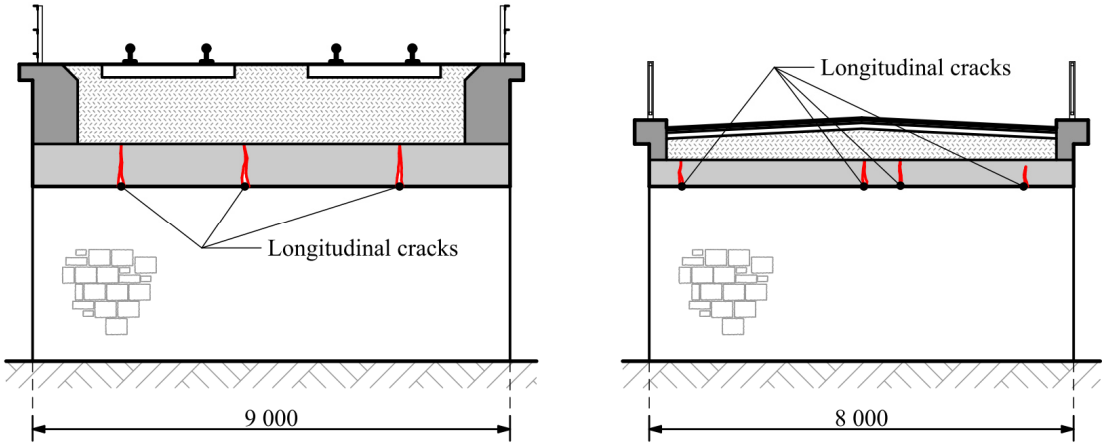

Figure 2. Railway (on left side) and road (on right side) masonry arch bridges; barrel vaults were cracked in the longitudinal direction.

A shell model can be used for explaining the central cracks. Deformation of the vault using the shell model is shown in Figure 3. We obtain internal forces (normal force and bending moment) in both directions: in the longitudinal direction (axis X) and in the transverse direction (axis Y) too. Because of very low tensile strength of masonry in the transverse direction cracks can appear in the central part of vaults. Explanation of the existence of cracks near edges is not so clear. There are also horizontal forces due to traffic load in these areas. These cracks are large, their widths were observed from 10 to 30 mm. Sometimes their size is about 100mm and this part of vault is fully separated from the face (spandrel) wall. In this case the structure is unstable and the bridge should be closed to traffic.

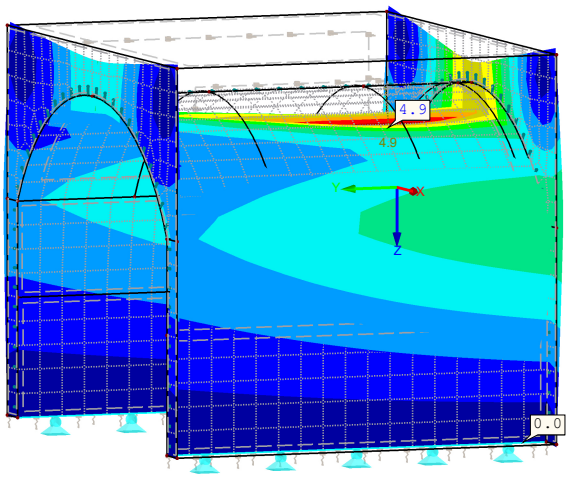

Figure 3. Deformation of the shell model due to live load.

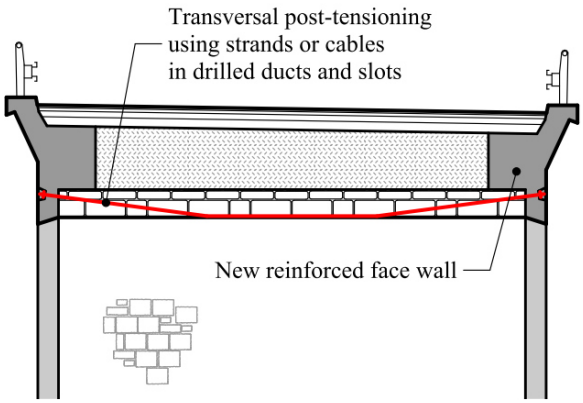

Figure 4. Arrangement of transversal post-tensioning.

2. Design of strengthening using transverse post-tensioning

Structural strengthening is based on an analysis of the vaults using the shell model. Tensile forces in the masonry barrel vault are taken by transverse post-tensioning (Figure 4). Post-tensioning is achieved by transverse cables. Cables usually consist of monostrands, each with two or three pieces. They are pushed into drilled cable ducts and slots prepared in advance in the masonry. Diamond drilling and sawing technology should be used. The special drilling support has to be used for preparing of cable ducts. Anchorages are positioned into new widening reinforced concrete (RC) walls. Prestressing forces are distributed by them to the crown and supporting abutment walls, so no

crushing of stones or brick masonry due local pressure takes place. New RC face walls can also be used for widening of the bridge. This is the second benefit of this method and can be used in case of the road bridges. Widening can be large because the span of the cantilever can be designed up to 3m length without difficulties. Stability of the new face walls is blocked by forces in the anchorages. Those prestressing forces should be taken from force equilibrium in horizontal direction. Active forces are the horizontal part of earth pressure due to traffic load and embankment over the vault multiplied by safety coefficient 1.5 or the partial safety coefficient design method can be used. Passive forces are in fact prestressing forces in the anchorages. A check of the stress in masonry vault in horizontal direction is also necessary. According to the experience a value 20% of strength of masonry in perpendicular direction can be taken into account. The example of a real road bridge reconstruction using described method is given in the pictures below (Figures 5, 6 and 7).

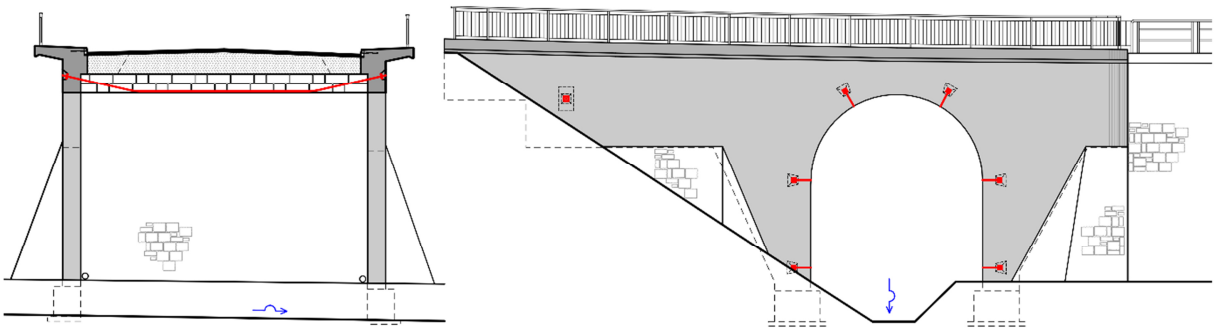

Figure 5. Example of design reconstruction of a road bridge using transversal post-tensioning with RC face walls.

Figure 6. Collapse of the old masonry face wall due to water, frost and ice.

3. Example of the reconstruction of the road stone masonry arch bridge

This road bridge was built in 1880. It is situated on 1st Class road No14. The main structure is a barrel vault with face walls. Span of the vault is 6.6 m (Figure 5). Construction comprises sandstone masonry.

Longitudinal cracks similar to those shown in Fig. 1 and buckling of one face wall were observed in 2002. The buckling became so extensive through the years that finally a part of face wall collapsed (Fig. 6). The traffic over the bridge was stopped. Design for reconstruction using strengthening of this vault by transverse post-tensioning was made in 2003. It is based on transverse cables with anchorage in the new RC face walls. Widening of the bridge was achieved as a secondary effect. The reconstruction was made in 2003 by MADOS MT ltd., the post-tensioning with drilled cable ducts was made by Mitrenga-stavby ltd. Further pictures show the bridge after repair works (Figures 7 and 8).

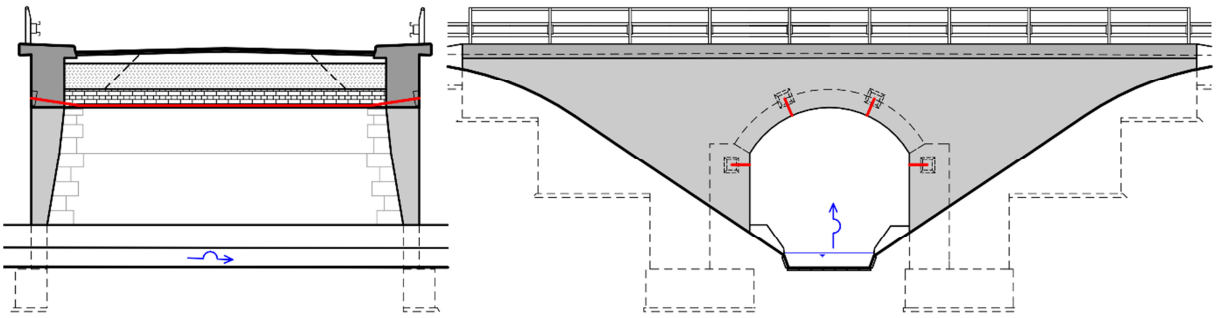

Figure 7. Plan of the structure measured during prestressing; left - cross section of the vault with cables; right - view of new face wall with anchorage ducts for four cables.

4. Process of the post-tensioning

This method of repair of the masonry arch bridge is a typical example of the process of post-tensioning. Cable ducts and slots were prepared before new RC walls as the first stage of reconstruction. Walls were built in the second stage and anchorages areas were prepared in concrete too. In the third stage the cracks were grouted by mortar injections and cavities over the vault were filled through drilled holes too. The post-tensioning was installed after concreting. The cables were tensioned to a magnitude of 180 kN with 5 minutes relaxation using single-cable prestressing jack of a range up to 200 kN. The cables were tensioned from one side and the extension of individual cables was measured during the process. Tensioning was applied carefully in 20 kN steps simultaneously increasing of the force in all cables of one arch. After post-tensioning the cable ducts were injected with common cement mortar and the slots were grouted up.

5. Example of the reconstruction of clay brick masonry arch road bridge

The vault is cylindrical with its center line in the shape of a circular segment from masonry 450mm thick. Lime mortar was used, partly flushed away, of strength 0.2 to 0.4 MPa. The span was 4.5m, width of the vault 10m, length of newly realized face walls 18.4m. The plan of the structure is in Fig. 7.

The main reason for the repair was buckling of both face walls and cornices with subsequent occurrence of longitudinal cracks 20-30mm wide between the vault and walls downstream and about 10mm upstream. In relation to the above mentioned type of defects the strengthening was designed in such a way that new RC walls were concreted against the original face masonry walls. RC walls were stabilized by transverse prestressing. Load bearing capacity was set in the longitudinal direction (suitable for Class A) without decreasing the calculated values caused by defects in the transverse direction. Face walls were stabilized by transverse prestressing with unbonded cables. The cables comprised three strands Ls 15.7 mm NPE (protected prestressing cables against corrosion, manufacturer Austria Draht).

Original stone vault was provided with cable ducts, diameter 52mm for setting of prestressing cables. Cable ducts formed a frame with inclination 10 degrees to the longitudinal radial plane. They were drilled from the vault towards the faces. On the upper surface of the stone vault the cables were set in slots 70 × 50 mm. New RC walls were concreted against the original faces and remaining parts of the face walls. Defects of the original structure are shown in Figure 8.

Measurement of horizontal deformation of the structure was carried out in three reference lines 2.2m long. The reference lines were made of steel anchors fixed in the vault masonry and steel pipes. Deformations were captured by inductive displacement sensor WETA 2mm with a range 0.001mm. Prestressing force was measured by a tester Proceq 200 kN. Deformation was continually monitored by a computer. The temperature during monitoring was practically stable +5°C.

Prestressing forces were induced evenly into the vault so that influence of uneven prestressing on displacement of concreted walls was avoided. First, the cable No. 1 was stressed in all four three-

strand cables, followed by the cable No. 2 and then No. 3. Prestressing of the vault was carried out by a prestressing jack in 20 kN steps up to the designed prestressing force. It was possible to apply the full prestressing force in the cables (180 kN).

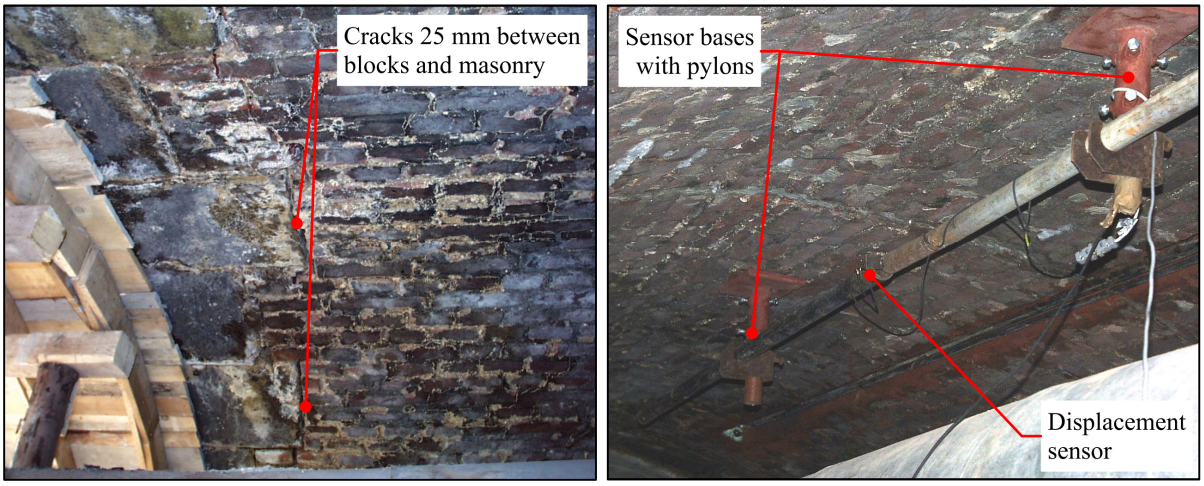

Figure 8. Defects in vault and sensor base; left - cracks between face wall blocks and masonry caused by buckling; right – sensor base in the crown with displacement sensor.

6. Deformation of masonry walls

Compression in the walls increased evenly in all sensor reference lines in time. During prestressing masonry was compressed immediately after prestressing was induced, after anchoring of each cable the increase tended to stop. After prestressing was completed (last cable was prestressed) the increase in compression stopped fully.

Relation between the deformation (compression) of masonry and magnitude of prestressing force is in Figure 9.

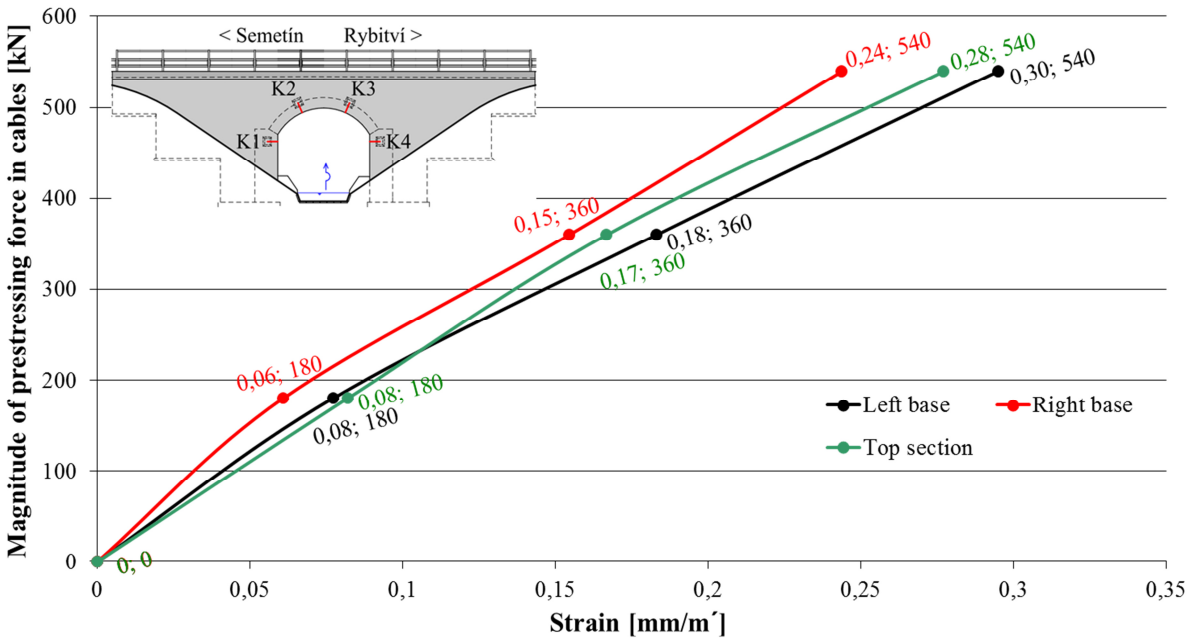

Figure 9. Relative compression of vault masonry during horizontal prestressing.

Following conclusions may be induced from the resulting relation:

1) It was possible to stress the cables up to the predicted and designed force 3 x 180 kN = 540 kN in one cable. Such forces were sufficient in relation to stability of the structure described in Paragraph 2. With such forces no negative impact occurred (cracks, crushing etc.). The concreted structure remained still without movement. The masonry was compressed practically linearly, i. e. prestressing was performed in elastic part of the masonry behaviour. It means that original longitudinal cracks in vault (between brick vault and original stone face walls) were properly filled with grout from the statical point of view, because no displacement occurred when there was no prestressing force. Subsequent grouting can reliably through drilled holes fill cracks and cavities that were created by defects in original vault.
2) Left side of the vault (left abutment area) was slightly softer – and it was compressed more. The difference is 10 % compared with the average value; and it is practically of no significance. Vault masonry com-pressed regardless of cohesion between vault and consolidated infill (reconstruction was carried out during operation without removal of infill) and without visible influence of newly realized walls on original walls and infill. Such influence is thus not big and with relatively small magnitude of compression only stiffness of vault and abutment in longitudinal direction may be important.
3) Average max. compression reached in springings was 0.27 mm/m´; in the crown 0.28 mm/m´. It is almost constant compression in the transverse direction upwards and proves good design of prestressing forces and also good realization of the reconstruction. Deformation of the structure is in compliance with assumptions given in Paragraph 2 and it is possible to consider them as confirmation of this system of reconstruction of bridge vaults (Figure 10).

Figure 10. View into the barrel vault; the picture shows sand stone masonry of the vault and cable slots after completion.

7. Example of the reconstruction of the clay brick masonry arch railway bridge

The bridge carries a double railway line Brno – Česká Třebová. Due to longterm influences of operation the vault was separated by longitudinal cracks into two independently acting parts under each track with third edge vault belt 1.2 m wide which was about to collapse. First repair was carried out in 2014 – new face wall statically secured by transverse prestressing. A set of arm amplifiers located in rail track No. 1 and 2 axes provided technology for deformation measurement.

The superstructure of the railway vault bridge is formed by segment brick vault with a clearance 7.540 m and a rise of 1.970 m. The springing is 2.100 m above the pavement and the crown is 4.220 m above the road. Thickness of the vault is about 0.840 m; this value comprises in lower part about 35 – 60 mm of torcrete. The repairs of both vault faces were formed by new RC face walls (Figure 11)

which transfers the induced transverse prestressing into the whole vault section. Stabilization of separated parts of segment vault was achieved by induction of prestressing in the transverse direction by four cables. All masonry in the vault was grouted by cement grout in a matrix 600x600 mm.

Figure 11. Monitored bridge vault, new cast-in-situ walls.

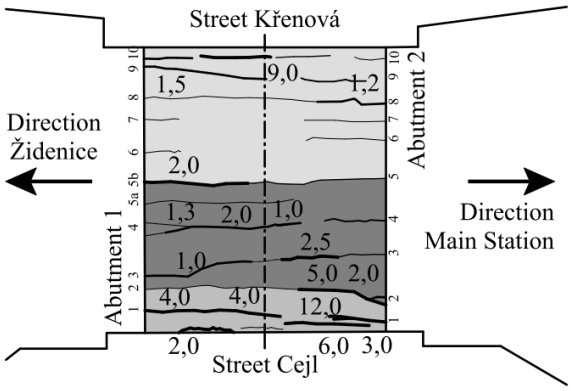

Figure 12. Location of cracks and division of vault into three separate parts.

Larger cracks divided the vault into three independent belts (Figure 12) which of course influenced the whole structure. The edge belt had also visibly dropped when compared with other parts of the vault. Diagnostics by probes confirmed that the cracks extended into masonry and that the masonry was saturated with water. The cracks were found in both abutments in approx. vertical direction. In abutment 1 there were mainly hair cracks, mostly below the springing, whereas in abutment 2 they were up to 2.0 mm wide and extended up to ¾ of the height from the springing. Other defects were corresponding to the age of the bridge. Surface defects were visible on both face walls especially below non-functional drainage.

8. Method of strengthening the structure

The main aim was to stabilize the structure and restore cohesion between separated parts in transverse direction. As a logical step separated parts of segment vault were stabilized by prestressing in the transverse direction. After grouting of cracks the prestressing in the whole structure was induced with the help of four prestressing cables through new face walls. Transverse continuity is supposed to increase stiffness of the whole structure and thus joint influence of the vault in the transverse direction for live load transfer.

9. Joint influence measurement principle

9.1. Measurement technology

Deformation measurement was carried out in three places along the axis of the vault, similarly to measurement before the repair. (Figure 13) [1]. A set of arm amplifiers was placed in the same anchorage places. For the purpose of this paper data from arm amplifiers placed below track axes were also used. (RZ1 and RZ2).

9.2. Data collection for measurement

For deformation measurement i.e. strain under traffic load a train with engine 560 „Pantograf“ (Figure 14) with weight of 37t was used. (more precisely – values measured under the first axle of the engine in the direction of traffic). Measured and recorded passages of this train were eight in 2013 and four in 2014. During measurement the direction and tracks were monitored. Sampling frequency was 20 Hz in 2013 and 50 Hz in 2014 (Figure 15). Frequency 50 Hz sufficiently documents all vibrations of the vault during train passages.

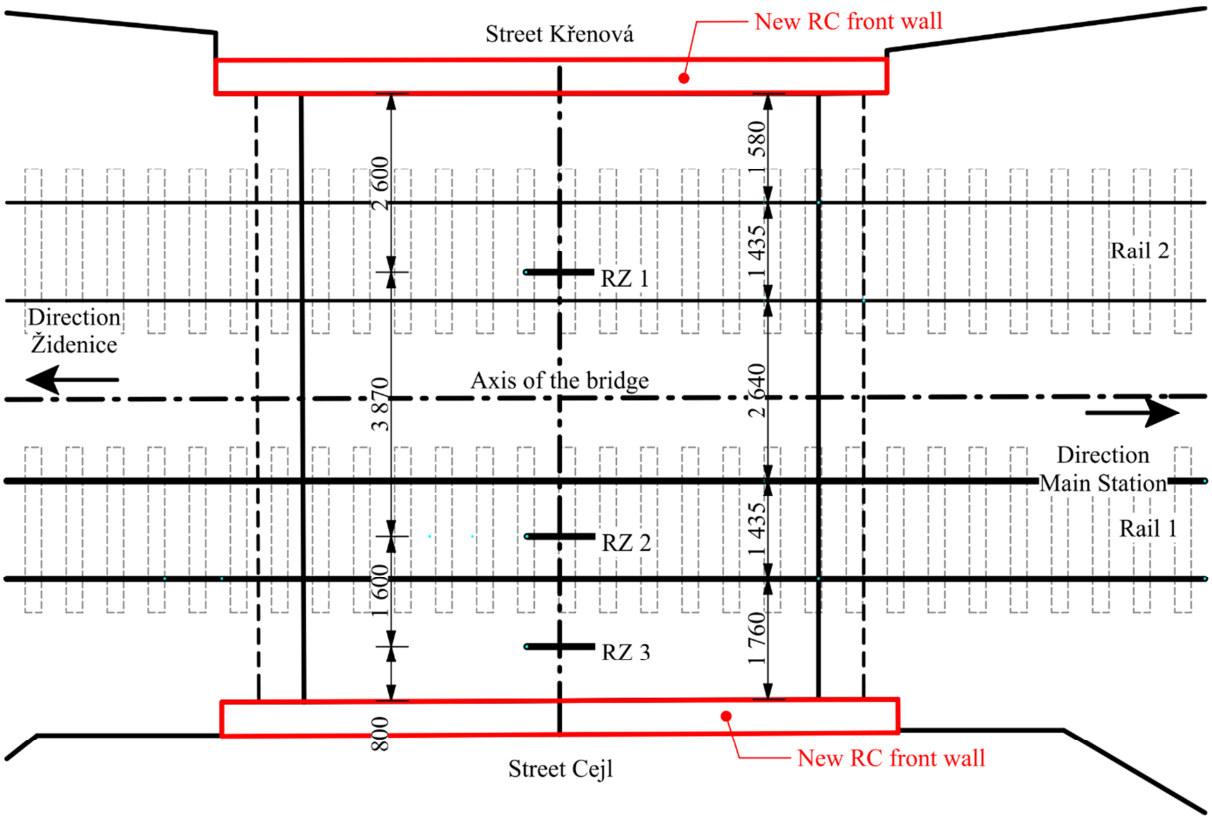

Figure 13. Positions of measuring basis RZ.

Figure 14. Train with engine 560 „Pantograf".

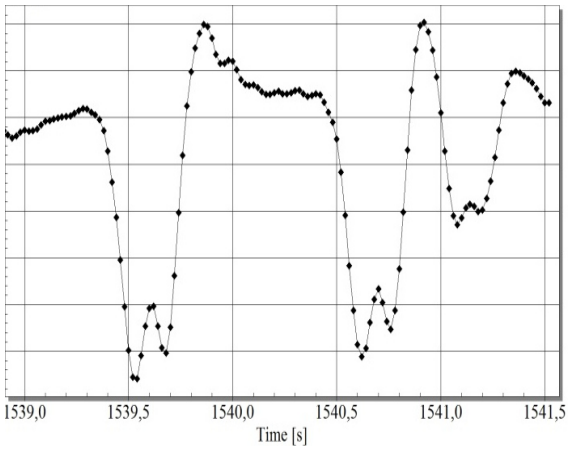

Figure 15. Train passage – sampling frequency 50 Hz.

10. Assessment of the measurement

Passages in the same direction and on the same track were compared; the comparison was based on data measured by arm amplifiers RZ1 a RZ2. Measured data were subsequently converted into strain on the crown both face (RZx-D) and back (RZx-H) sides of the vault. Values of strain are clearly shown in the following table (Tab.1).

Table 1. Values of strain.

Year	Train	Time	Train on rail nu.	RZ1-H	RZ1-D	RZ2-H	RZ2-D
2013	Pantograf	1435	1	-174.10	-33.48	-81.79	8.26
2013	Pantograf	5850	2	-14.86	10.94	430.57	-48.95
2013	Pantograf	6450	1	-141.52	-30.96	-83.98	8.67
2013	Pantograf	7875	2	-28.59	10.16	428.45	-51.61
2014	Pantograf	1540	1	-63.54	-10.59	-30.19	8.15
2014	Pantograf	3155	2	-12.33	2.59	-79.33	8.28
2014	Pantograf	5100	1	-68.36	-8.98	-27.87	6.69
2014	Pantograf	6780	2	-10.77	3.15	-89.53	10.51

10.1. Passage on track 2 above RZ1 (Figure 16)

From the measured data after passage on Track 2 above the arm amplified RZ1 it is clear that the vault was before and after the repair fully compressed. However, after the repair the strain decreased on the back side from its minimal value -167.67 µm/m to -68.36 µm/m and on the face side from its minimal value -34.68 µm/m to -10.59 µm/m. Proportionally the stiffness increase in the vault in transversal direction can be described for the back face as 2.45:1 and face side as 3.27:1. It can be stated that stiffness of the vault has increased three times in track 2 above the arm amplifier.

Similarly during passage on Track 2 the strain on the face side of the vault almost did not change in the place of Track 1 above the arm amplifier RZ2, on the back side of the vault it decreased from its minimal value of -86.31 µm/m to -30.19 µm/m, i. e. ratio 2.86:1.

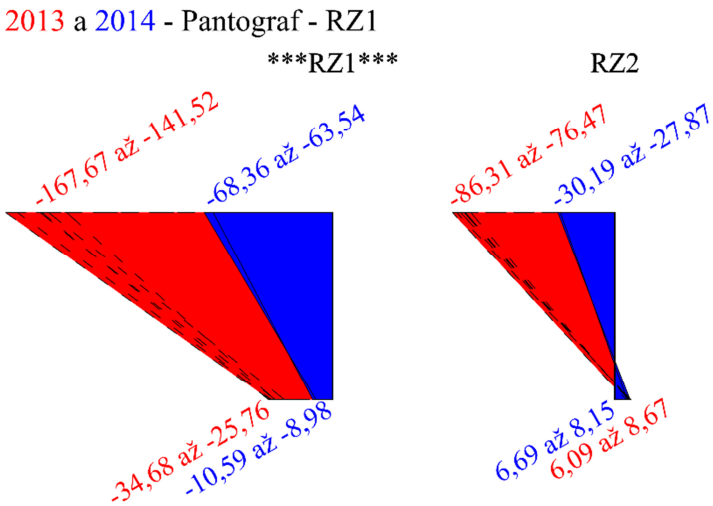

Figure 16. Strain of the vault in the location of RZ1 a RZ2 during passage above RZ1.

10.2. Passage on Track 1 above RZ2 (Figure 17)

From the measured data after passage on Track 1 above the arm amplifier RZ2 it is clear that the vault was before and after the repair on the back side in compression and on the face side in tension. After repair the strain on the back side decreased from measured minimal value -28.59 µm/m to -2.33 µm/m. Strain on the face side decreased from 10.94 µm/m to 3,15 µm/m. Proportionally the stiffness increase in the vault in transversal direction can be described for the back face as 2,32:1 and face side 3.47:1. It can be stated that stiffness of the vault has increased in the place of RZ1 three times.

During the passage on Tack 1 above RZ2 the strain on the face side decreased from measured maximal value of 51.61 µm/m to 10.51 µm/m, i.e. ratio 4.91:1. On the back side of the vault the strain decreased from minimal value of -430.57 µm/m to -89.53 µm/m, i. e. ratio 4.81:1.

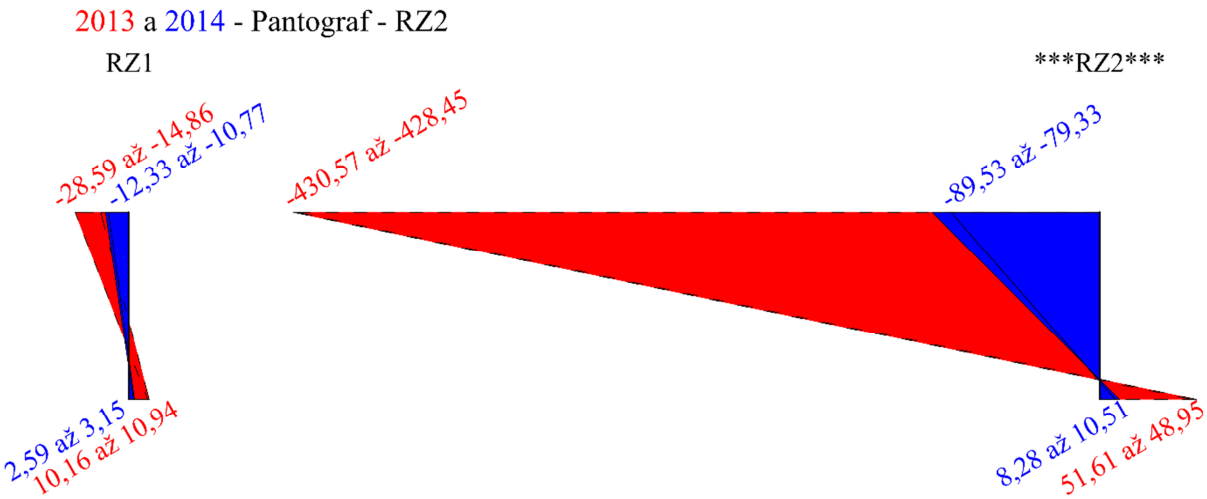

Figure 17. Strain of the vault in the location of RZ1 and RZ2 during passage above RZ2.

11. Conclusion

Described method of strengthening and widening masonry arch bridges with barrel vaults using the transverse post-tensioning with new RC walls has a lot of advantages. It is simple and very effective too. The repair costs are about 40% of the new construction. If the quality of stone is satisfactory, then this method may be recommended.

Acknowledgements

This paper has been prepared under project No. LO1408 "AdMaS UP – Advanced Materials, Structures and Technologies", supported by Ministry of Education, Youth and Sports under the „National Sustainability Programme I".

References

[1] Klusáček L 1993 Podélné trhliny v klenbách z kusových staviv /Longitudinal cracks in masonry vaults/ *Časopis Beton a zdivo /Journal Concrete and Masonry/*

[2] Klusáček L 2005 Zesilování betonových a zděných konstrukcí předpětím /Strengthening of concrete and masonry structures with post-tensioning/ *Sborník příspěvků konference Zesilování betonových a zděných konstrukcí /Proc. Conf. Strengthening of concrete and masonry structures Brno/* (Česká betonářská společnost - ČBS) pp 113-119

[3] Klusáček L and Pěkník R 2016 Reconstruction of Arch Bridges using Concrete Walls and Transversal Strands *2. Brückenkolloquium Beurteilung, Ertüchtigung und Instandsetzung von Brücken - Tagungschandbuch* (*Esslingen, Deutschland*) pp 203-206

[4] Klusáček L and Strnad J 2011 Rekonstrukce klenbových mostů betonovými čely a příčnými předpínacími kabely /Reconstruction and strengthening of masonry arch bridges using concrete face walls and transversal prestressing cabels/ *Časopis Silnice a železnice /Journal Roads & Railways/* **2** pp 23-29

[5] Požár M, Klusáček L and Nečas R 2015 Výsledky stabilizace železniční mostní klenby příčným předpětím /Results of stabilization of the railway vault bridge using transversal post-tensioning/ *Sborník příspěvků 20. Mezinárodní sympozium mosty /Proc. 20th Symposium Bridges 2015 – Brno/* (SEKURON s.r.o.) pp 249-254