BRNO UNIVERSITY OF TECHNOLOGY
VYSOKÉ UČENÍ TECHNICKÉ V BRNĚ

FACULTY OF MECHANICAL ENGINEERING
FAKULTA STROJNÍHO INŽENÝRSTVÍ

INSTITUTE OF MACHINE AND INDUSTRIAL DESIGN
ÚSTAV KONSTRUOVÁNÍ

DESIGN OF STREET LAMP WITH SOLAR POWER
DESIGN LAMPY POULIČNÍHO OSVĚTLENÍ SE SOLÁRNÍM NAPÁJENÍM

MASTER'S THESIS
DIPLOMOVÁ PRÁCE

AUTHOR Ing. Dinara Bulatova
AUTOR PRÁCE

SUPERVISOR MgA. David Karásek
VEDOUCÍ PRÁCE

BRNO 2016

BRNO UNIVERSITY OF TECHNOLOGY FACULTY OF MECHANICAL ENGINEERING

Master's Thesis Assignment

Institut:	Institute of Machine and Industrial Design
Student:	**Ing. Dinara Bulatova**
Degree programm:	Applied Sciences in Engineering
Branch:	Industrial Design
Supervisor:	**MgA. David Karásek**
Academic year:	2015/16

As provided for by the Act No. 111/98 Coll. on higher education institutions and the BUT Study and Examination Regulations, the director of the Institute hereby assigns the following topic of Master's Thesis:

Design of Street Lamp with Solar Power

Brief description:

Analysis and design of street lamp with solar power. The proposal has to fulfil general requirements for industrial design and respect functional, structural, technological, aesthetic and ergonomic principles.

Master's Thesis goals:

Master's thesis must contain: (corresponding to the names of individual chapters)

1. Introduction
2. Overview of the current state of knowledge
3. Analysis of the problem and objective of the thesis
4. Variants of design concepts
5. Solution of shape
6. Structural, technological and ergonomic solution
7. Colour and graphic solution
8. Discussion
9. Conclusion
10. Bibliography

Form of thesis: report, summarizing poster, technical poster, ergonomic poster, design poster, photography of model, physical model
Type of thesis: design
Purpose of thesis: education

Output: function sample

Project: Specific university research

Scope of thesis: ca. 72 000 characters (40 - 50 pages of text without figures)
Directives for formatting of the thesis:
http://dokumenty.uk.fme.vutbr.cz/BP_DP/Zasady_VSKP_2016.pdf
Template of thesis: http://dokumenty.uk.fme.vutbr.cz/UK_sablona_praci.zip

Bibliography:

Dreyfuss, H., Powell, E. (2012): Designing for People. Allworth, New York.

Fiell, C., Fiell, P. (2001): Designing the 21st Century. TASCHEN, Kolín nad Rýnem.

Johnson, M. (2002): Problem solved. Phaidon, Londýn.

Lidwell, W., Manacsa, G. (2008): Deconstructing product design. Rockport Publishers, Massachusetts.

Morris, R. (2009): The Fundamentals of Product Design. AVA Publishing SA, Lausanne.

Norman, D. A. (2004): Emotional Design. Basic Books, New York.

Pelcl, J., a kol. (2012): Design od myšlenky k realizaci. Vysoká škola uměleckoprůmyslová v Praze, Praha.

Thomson, R. (2011): The Manufacturing Guides, Product and Furniture Design. Thames & Hudson Ltd., Londýn.

Thomson, R. (2011): The Manufacturing Guides, Prototyping and Low-volume Production. Thames & Hudson Ltd., Londýn.

Tichá, J., Kaplický, J. (2002): Future systems. Zlatý řez, Praha.

Students are required to submit the thesis within the deadlines stated in the schedule of the academic year 2015/16.

In Brno, 26. 11. 2015

VYSOKÉ UČENÍ TECHNICKÉ V BRNĚ FAKULTA STROJNÍHO INŽENÝRSTVÍ DĚKANÁT

L. S.

V.Z.

prof. Ing. Martin Hartl, Ph.D.
Director of the Institute

doc. Ing. Jaroslav Katolický, Ph.D.
Dean

ABSTRACT

Main goal of the diploma thesis is to design solar street light, which will which will meet the demands at design in the 21st century. Analyzes will show possible directions, that should successful design of selected project follow. A survey of current projects existing in public spaces will reveal major shortcomings of the existing designs. Based on these findings it will be possible to proceed to the creation of several variants of the design. From those, there will be possibility to choose the final version. This version will be processed according to the researched specifications with regard to the scientific standards set for public lighting in general.

KEYWORDS

Street light, solar power, residential areas, design

ABSTRAKT

Cílem diplomové práce se stane návrh designu solárního pouličního osvětlení, které bude splňovat nároky na design v 21. století. Přípravné analýzy ukáží možné směry, kterými by se měl úspěšný design zvoleného projektu vydat. Průzkum současných projektů existujících ve veřejném prostoru rovněz odhalí hlavní nedostatky stávajících návrhů. Na základě těchto poznatků bude možné přistoupit k tvorbě několika variant designu, ze kterých bude zvolena finální verze. Tato verze bude zpracována dle určených specifikací s ohledem na platné normy pro veřejné osvětlení.

KLÍČOVÁ SLOVA

Pouliční osvětlení, solární napájení, rezideční oblasti, design

BIBLIOGRAPHIC CITATION

BULATOVA, D. *Design of street lamp with solar power.* Brno: Vysoké učení technické v Brně, Fakulta strojního inženýrství, 2016. 75 s. Vedoucí diplomové práce Mgr.A. David Karásek

PROHLÁŠENÍ O PŮVODNOSTI

Prohlašuji, že jsem diplomovou práci na téma solárního pouličního osvětlení vypracovala samostatně a veškeré použité zdroje jsou řádně uvedeny v seznamu použité literatury.

v Brně dne

podpis

CONTENT

INTRODUCTION

The graduation thesis topic is the design of street light powered by the sun. The purpose of this study is to analyse current street lights design with solar panels and offer my own solution based on this analysis. Solar street lights use solar power — the third most important renewable energy source [1]. This type of the street light is pollution free and does not have adverse effect after the installation (unlike greenhouse gases or noise pollution). Even in regions with a cloudy climate solar street lights are able to obtain enough sunlight to produce the light every night. A kilowatt peak solar system generates around 750 kilowatt hours per year in a cloudy climate that means 7000 hours of lamp's work per year [2].

Solar street light has many advantages and becomes more popular, but also it has significant disadvantages: it needs big investments (often for unpleasant design), a regular service and the solar panel still has lower efficiency. Big investments are caused by the materials used and the technology of the solar battery. The efficiency of the solar battery reduces when the panel is covered with dust or snow so it requires a regular service. Also, rechargeable batteries and other elements should be replaced several times over the lifetime of the lantern.

Streetlights powered by the sun are often set by the municipality, for this reason average people don't know about efficiency of solar panel and can't evaluate its utility. In the same time one of the advantages of street lights powered by the sun is its independence ("island" system) or possibility feed extra power into the grid (grid system) and use it for people needs.

In this work I will focus on the solar street light for a residential area and parks that will be efficient, sustainable and won't destroy the cityscape. Consideration is appearance and terms of operation. Solar street lights have a long lifetime and have to be attractive during all the time of usage.

1 OVERVIEW OF THE CURRENT STATE OF KNOWLEDGE

1

Problems of ecology and technological revolution were the basis for the development of alternative sources of energy, in particular solar energy. One type of conversion solar energy into electrical energy — solar panels. They are used in solar power plants, on space stations, for domestic needs (panels on the roofs and portable batteries for electric appliances) and for the outdoor lighting as street lamps.

1.1 Design analysis

1.1

Today on the market we can find a lot of street lights that looks like conventional lanterns with one big element — the solar panel on the top and the battery on the pole. Another example of poor design is solar street lights mounted in Prague. They have visible frameworks, cables and big battery box (becoming place for vandalism).

Img. 1-1 Solar streetlight in Praha

But due to the actuality of the ecology theme street lights with solar panels become the designers' object of attention. In relation to design we can see three ways:

1. standard form and improving current street lights,
2. nature form and bionic,
3. attached alternative energy source.

1.1.1 Standard form

1.1.1

Street lights repeat the shape of conventional lights and are used primarily for pedestrian ways due to the size of the solar panel.

SKU: SPL07 5 watts LED solar street light
Manufacturer
Greenlytes

Img. 1-2 5 watt LED Solar Street Light [3]

Designing solutions
This street light repeats the design of a usual street light: simple form, straight lines, less decoration and more functionality. If you don't know that it is street light powered by the sun you even can't recognize it. This design doesn't help to understand the advantages of such type street lights.

Shape (composition) solutions
Photovoltaic panel is combined with the lamp. The case with the lamp and the solar panel is fixed on the pole by the brackets. The street light is made of a durable aluminium with a tempered glass cover and contains LED bulbs, the rechargeable lithium ion battery, the solar panel, the infrared motion detector, the photocell and the charge controller. The photocell and the motion sensor change the intensity of lighting. It depends on the time of the day and works to a full brightness only when the sensor registers the movements of people or cars.

Ergonomic solutions
The lamp is positioned as "requires minimum care", but it needs to be cleared of dust, leaves, bird droppings and snow, that means every day. This type of lamps is easy to produce and set.

Colorful and graphic solutions
Due to the form, material and familiar design this lamp hasn't any characteristic lines that can decorate the street or evaluate efficiency or modernity of a solar street light.

Spirit
Manufacturer
Kaal Masten B.V.

Img. 1-3 Spirit by Kaal Masten [4]

Designing solutions
This street light repeats the shape of conventional street lights — it is simple and angular. The panels are arranged on the pillar of the lantern: for this reason the street light isn't overloaded with unusual elements (a large solar panel on the top), but the effectiveness of an alternative energy source is preserved.

Shape (composition) solutions
The main difference of this model is the location of the solar panels. This variant is more visually appealing than lights with independent solar panels on the top of the pillar. But with this arrangement of panels, the sun will always feed only half of the panels. It means that the lamp will always work only half of its capacity.

Ergonomic solutions
The street light is made of modules and can reach the height of 18 meters. It helps to choose the optimum construction in relation to the environment and the need for lighting. The manufacturer claims that this is the first available fully sustainable public street light.

Colorful and graphic solutions
The design of this street light responds to a modern city which is made of glass and concrete. The appearance is fully consistent with the function, it hasn't any unnecessary decorative details.

1.1.2 Nature form and bionic

Inspired by nature smooth lines emphasize ecological value. Designers repeat shapes of flowers, trees or even mango leaves.

Light Blooms (concept)
Manufacturer
Philips

Img. 1-4 Light Blossom by Philips at day [5]

Designing solutions
Inspired by flowers the Light Blooms open during the day to collect the sunlight through its solar panels and transform it into energy. Then at night the “flower” closes and LED lights turn on to brighten city streets.

Shape (composition) solutions
For different functions the street light takes different forms. Street lights absorb maximum sunlight by disclosing the "flower". And the lamp just illuminates the street by the "closed" condition. This decision is merely decorative, as the street light can illuminate even with closed "bud".

Ergonomic solutions
The LED lights feature motion sensors that are triggered once the sun sets by individuals walking in close proximity to the light. Extra power is fed directly into the grid for use elsewhere.

Colorful and graphic solutions
This concept represents a beautiful idea — it imitates disclosure and closure of a flower. The fascinating lamp demands the similar environment and is more suitable for public vacation spots.

Solar Tree by Lovegrove
Creator
Ross Lovegrove

Img. 1-5 Solar Tree by Ross Lovegrove [6]

Designing solutions
This famous project was created by Ross Lovegrove for the street in Vienna, but now it successfully participates in exhibitions all over the world. ‘This is a project that celebrates design, nature and art and represents the DNA of our time,’ says Lovegrove [7]. He believes that natural and organic forms can create the maximum beauty.

Shape (composition) solutions
The size of the street light - six meters in height, it consists of ten "sticks". There are batteries in the "head" and LED-lamps at ten “sticks”. The tree can be also used for mobile phones and laptops recharging.

Ergonomic solutions
Also, solar tree lights can be used like meeting point, you can have a rest on the sculptural concrete base. The bright color and the unusual form of the lamp draws attention and provokes to learn more about it. But due to the big size and bold design the lamp can't be established everywhere.

Colorful and graphic solutions
The street light follows the shape of a tree, the panels are located on the end of green "branches". This is a vivid visual image. It transmits the idea of ecologically friendly solar energy and attracts public attention to the energy problem.

Solar Tree by Vinaccia (concept)
Creator
Giulio and Valerio Vinaccia

Img. 1-6 Solar Tree by Vinaccia [8]

Designing solutions
Another project that copies the body of a tree is the Solar Tree by Giulio and Valerio Vinaccia. It also has the "stick" and six "branches" with solar panels at the end. Designers describe this project like the fusion between a tree and a street light and like a metaphor of life — leaf-shaped panels catch the sunlight to return it at night.

Shape (composition) solutions
The "tree" is made from the cast aluminium and the light source is a power LED lamp. The panels are mounted at different angles, that provide stability in energy production. But the number of panels exceeds the number of panels needed for efficient operation.

Ergonomic solutions
This solution is a combination of sculpture and street light. So it will look good only in public places, as it has too large dimensions to be located in a residential area.

Colorful and graphic solutions
This decision is better for manufacture, but destroys the full impression of the "tree". The concept looks less aesthetic: solar panels save their form and don't remind of leaves.

The presented way represents biomorphism style. The style is most clearly manifested in the architecture and small architectural forms [9]. The image of a tree is most commonly used in the design of street lights and design of support for a solar panel. The Solar Tree is a metaphor — like trees, it collects the sun and recycle it into energy. The top of a tree also creates a shadow and makes a place for meetings and relaxation.

Img. 1-7 Spotlight Solar product "Lift" [10]

Img. 1-8 Lamp Tree on metro station "Troparevo" [11]

All these projects cost more money due to the usage of the unusual material and technology. Street light that looks like a tree consists a lot of solar panels, more than one lamp needs, but it allows to transmit extra power to common electric grid. Additionally, this type of a street light powered by the sun looks more interesting and brings a sense of optimism to a grey urbanity.

1.1.3 Attached alternative energy source

1.1.3

It is a popular way in a design concept because today the conversion efficiency is about than 20% efficiencies. To increase this rate designers add one more engine like a wind or water turbine. The distinctive excellence of this type of a solar street light is the higher efficiency, but it is harder to produce, that means also the higher cost.

Mango (concept)
Creator
Adam Miklosky

Img. 1-9 Mango by Adam Miklosky [12]

Designing solutions
Mango connects two ways of design: attached alternative energy source and nature form. The mimicking concept is designed by Adam Mikloski for India.

Shape (composition) solutions
The tops of "mango leaves" contain solar panels. But due to the monsoon climate there aren't many sunny days in India. For this reason, when it rains, "leaves" funnel water to the water turbine in the ground.

Ergonomic solutions
This project is a good example showing how the design depends on the environment. Technically it has some problems with the protection of the solar panel from water and utilization water after the water turbine.

Colorful and graphic solutions
The shape of this street light is very elegant and good-looking. There is also an interesting solution for lamps. The lamp's case is perforated, it creates an interesting pattern and allows to pass sufficient light.

Eolgreen F104
Manufacture
Eolgreen

Img. 1-10 Outdoor Lighting by UPC in Barcelona [10]

Designing solutions
Due to the Spanish weather and geographic location Barcelona became the city where the first public street lighting system powered by the solar and wind energy was established.

Shape (composition) solutions
The design was developed by Ramon Bargalló from Universitat Politècnica de Catalunya (UPC) and the Eolgreen company. The street light has two solar panels, one wind turbine and one lamp. It doesn't look really natty or attractive: all elements are placed separately and only the turbine has an interesting shape.

Ergonomic solutions
Depending on the height (6 or 8 meters) street lights may illuminate 10 -14 meters. It is enough to illuminate the sidewalk and the two-lane highway. This system is truly ecologically efficient and it is an autonomous system. Now it is working on the Mar Bella esplanade in Barcelona.

Colorful and graphic solutions
Environmental issue of this product is again emphasized by the green colour (it's the colour of the turbine). This street light hasn't any decoration, just a small ornament between the pole and the "branch".

In the framework of the topic — street lamp for the residential area — a turbine can't be used as it gives a lot of noise which is unacceptable to the public area.

1.2 Marketing study

1.2

1.2.1 Business strategy

1.2.1

The research of Exxon Mobile company shows that the world's energy needs increase by 1.3% annually [14]. Therefore energy producing fields will grow, and according to the current trend the sector of alternative energy will also grow significantly. Today Germany gives priority to the use of the solar and wind power source, and the capabilities of traditional industries (using coal and gas) are reduced. In 2014 the production of energy by solar panels grew by 13% and amounted to 35.2 billion kilowatt-hours. Solar panels produce 5% of the total energy produced [15].
The most expensive parts of the solar street light are solar panels and the battery. Today the cost of solar panels is falling, due to the increased competition and subsidies from the state. The cost of one watt for silicon solar cells fell to 0.5$ /W (it means that solar cells for 1000 watts cost $ 500) [16]. Research and experiments, which aim is to increase the efficiency of solar panels and reduce their cost, are continued.
The market has changed with the development of the solar panel production in China. Several years ago street lights with solar panels were presented as part of the range of companies involved in lighting equipment, and only the company with ecological character was focused on the solar street light. Now the market has expanded and lights become more available. The Chinese producers sell the street light even in the online store (such as Alibaba.com). Its quality and service life may be lower, but their main advantage is an affordable price.
Consequently, we can say that favorable situation for the market of devices using solar panels is created today. Despite a strong competition, there are many free areas and target groups (their needs depend on the level of the budget and scope). This situation allows counting on the state support for the project and realization of government or-

ders. The aim of this project is to design the solar street light for the residential area, so the strategic goal is to obtain orders for the street lights from the state.

1.2.2 Analysis of market opportunities

There are five types of company-competitors.
The first type is the big and well-known corporation like Philips [17]. They develop innovative direction, which includes lights with solar panels. The second type is the company involved in lighting equipment. In whose assortment there are also lights with solar panels. These are companies such as Truelite [18], Sum [19], Kaal Masten [20], Visiocom [21]. They offer high-quality equipment, they have a good image by the name. The third type is the company selling only lights with solar panels. These firms are Exprt [22], Greenlytes [23]. They often have an environmental focus. They offer products feeding from other alternative energy sources (such as the wind turbine). The fourth type is the firm that represents a single product (such as Torch [24] or Uge [25]). They have the most advanced design, strong concepts, but their costs are higher. The fifth type is not a separate company - it is the Chinese manufacturers. They produce cheap and not good-looking street lights with a short service life. They can quickly change the product to improve it and have the largest number of proposals. Their strategy is the low cost and availability, rather than the quality. The first four types are more focused on the quality and efficiency. Companies representing the individual products (the fourth type) may be financed by the municipality. We can't say that companies have specialization in the wholesale or retail buyer.
The first types of companies aren't serious competitors. The strongest influence on the market have Chinese competitors. Subsidies from the government allow manufacturers reduce product prices. It forces the competitors also reduce the cost of their products and develop new, more efficient products [26]. On the other hand, according to the report from Almaty (Kazakhstan), products from China are associated with a poor quality in the mind of the consumer, it reduces the demand for street lighting from China [27]. According to the same report, it is possible to predict a high demand for the solar street light. The analysis of the situation in the field of energy showed that in Kazakhstan lighting costs account for about 13% of total electricity consumption. In this regard, the government adopted a number of programs to promote energy conservation. Currently local authorities are quite open to innovative solutions about alternative energy sources. This trend is observed worldwide.

1.2.3 Analysis and selection of target markets

Potential customers can be divided into three categories:

The private sector - private homes, cottages, manors.
The business sector - from small private shops to major shopping centers.
The public sector - the lighting of roads, squares, parks, yards, etc.

The contingent of consumers and their preferences are different by quality and price, the type of instruments and the volume of work.
The States and major corporations are investing in the market of solar cells as the replacement of existing energy sources. The municipality or the city government is one of the main buyers of solar street lights. The disaster at the Fukushima nuclear power plant in 2011 drew attention to the "green energy" and the government's plans

to use them. As seen in the graph the production of energy from renewable energy sources in Germany is growing and is not reduced in the near time [28]. Large companies are interested in the development of alternative energy sources, not only due to the environmental performance of this area, but also because of the economic benefits and the autonomy.

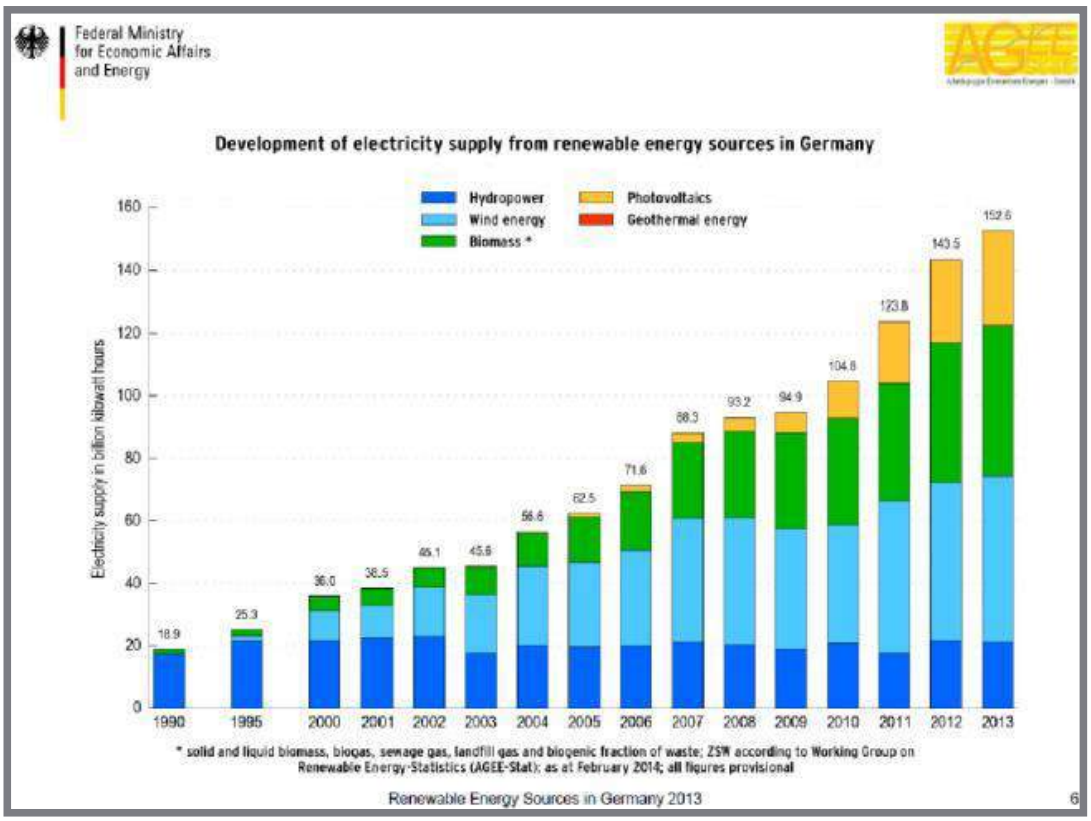

Img. 1-11 Renewable Energy Sources in Germany 2013 [29]

The target audience for this project are customers from the state. The States are interested in the development of solar energy to be independent of "energy" powers (such as Russia or the countries on the Iberian Peninsula). One of the most high-profile examples: the US government support for a startup Solyndra (now the company went bankrupt) [30]. There are reduced rates of payment for electricity owners of solar panels in Germany and England [31]. The closest countries to the equator are actively using solar panels for public purposes. A recent example - the installation of solar street light on the seafront of Barcelona [32].

Despite publicist claims that the panel can work anywhere in the world, the weather affects on the performance. According to Reuters the individual usage of solar panels falls in Germany. In 2014, the drop was 42% (by Bundesnetzagentur) [33]. According to the report generation the solar panel is 38.2 GW, which is almost half of the required possibilities of winter - 70 GW. It should be noted that the installation of solar panels on the northern latitudes may be uneconomic due to the short daylight hours and the lack of accumulated power.

The maximum solar radiation recorded at the equator, where daylight hours are long and the rate of solar radiation is high [34]. Third World countries (Middle East, India)

have a favorable location and high insolation. They actively use solar energy, the government is investing in alternative energy sources. But they are more interested in a cheap, easy to handle product. The issue price is critical for them. In addition, it is difficult for a foreign company to put the solar street lights — it is connected with the local authorities and the social structure [35]. The project from India faced with this problem and wasn't completed. For African countries the decision is in the use of individual light sources [36] [37]. Thus the existing solar lighting solutions to the Third World countries meet their needs - cheap, easy to maintain lamp that uses solar energy. In Europe and more economically developed countries, the market of lighting with solar panels is similar to the market of the third world countries, but queries are different. There is more emphasis on design and sustainability (sustainability also includes economic viability). Thus, the demand does not match the offer. The European Union supports the development of photovoltaic for over 30 years [38], including the socio--economic sector and is working on accelerated development and deployment [39] of cost-effective technologies. That confirms the correct choice of the target audience.

1.2.4 Marketing strategy

Many people were inspired by the idea of solar lamps — it can be installed anywhere, returning the surplus electricity to the grid and not polluting the environment. An obvious disadvantage is a significant investment and the need for regular service (to maintain the efficiency of the panels). There is another problem - the recycling of solar panels. In the future, it may be more efficient not to repair or reconstruct street lights, but replace it with more modern and efficient counterparts. So one of the requirements to the design of solar street lights - the modular design for a quick installation. Modularity is the main difference of this product from the competitors. It will increase the service life of the lamp. It will reduce the value of the product and will help to optimize the production for large orders. In the future, it will also make solar panels or light sources more efficient. Today, there is a widespread [40] replacement of conventional light bulbs with more efficient LED.

The objective of the pricing strategy is to maximize the use of the market. Therefore, the cost of the solar street light will be accessible (but it should not affect the quality of the components). Due to a strong demand and thanks to subsidies, the cost of solar panels is falling today. Solar panels are now worth about £ 6,800 for a typical system of 4 kW, compared with £ 8,400 three years ago [41]. The cost of the street light with the solar panel is in the price range of $ 300-1000 [42]. At the same time reducing cost of energy will continue. If we talk about the cost of one watt output power as a part of the solar module, it reached the level of approximately 1,2-1,3 € [43] in Europe and the United States. In the near future the price may drop to about one euro, the subject to an automated mass production of both solar cells and modules based on them.

Sales will be carried out by placing wholesale orders and retail sales in stores and on the Internet. Orders will be collected by participating in environmental exhibitions and active work in the media .

People are used to hearing about the environmental friendliness of the product, but do not know about its effectiveness. The presentation of the product (packaging) and communication (media and advertising) will be based on the idea of "effective and durable" solar street light. To stimulate the demand it must represent

demonstrating the benefits of solar lamps (saving electricity) at exhibitions,

comparable quality (design strength) of these fixtures with conventional garden street lights,
distribution of the product information (information campaigns in summer and incentive campaigns in winter).

1.2.5 SWOT analysis

1.2.5

	Positive	Negative
Internal	**Strengths** - modularity (production) - environmental - friendliness adaptability	**Weaknesses** - cost - service - low efficiency
External	**Opportunities** - modularity (easy to replace or dispose) - replacement elements for more powerful	**Threats** - weather conditions (snow, mudl, moisture) - bird droppings - vandalism - visual obsolescence

Img. 1-12 SWOT analysis

In developing the design of the project strengths and weaknesses will be taken into account. Working with weak characteristics (low efficiency, service, visual obsolescence) allows to stand out among the concurrency. Reforming of strengths (modularity, sustainability) will raise the level of the project and its value.

1.3 Technical analysis

1.3

The development of street lights with solar panels began in 1839 when the photovoltaic effect was opened by Alexandre-Edmond Becquerel. In 1883 the first module with use of solar energy was made by Charles Fritts. The world's first photovoltaic cell (solar cell) was created in Bell Laboratories in 1954 [44].
Between the invention of the first cell and the first solar street light was about 100 years. The first solar powered street lighting system was patented in 1978 (patent US 4200904 [45]). Today, the advances in technology and configuration are gaining momentum - solar-powered light pole and LED light fixture (patent US 7731383, 2008 [46]), the solar energy street lamp structure with adjustable angle (patent US 8066399, 2009 [47]), the solar powered rechargeable street light with a resistant tamper (patent US 7976180, 2009 [48]), hundreds of patents are pending.

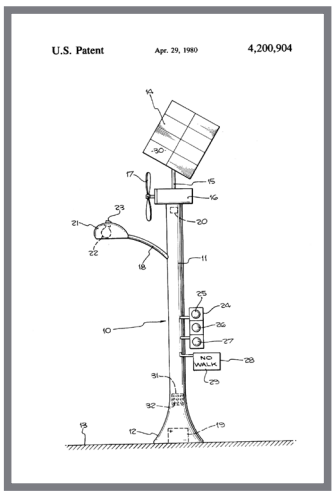

Img. 1-13 Patent US4200904 [49]

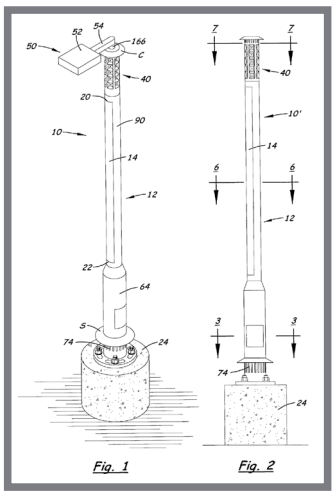

Img. 1-14 Patent US7731383 [50]

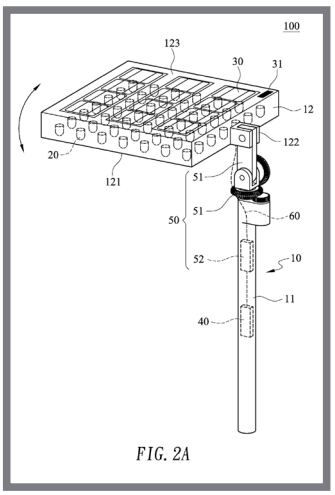

Img. 1-15 US8066399 [51]

The construction design of most solar street lights used today is shown at picture 1-16. Solar street lights are powered by photovoltaic panels. Panels charge a rechargeable battery, which powers a fluorescent or LED lamp during the night [52].

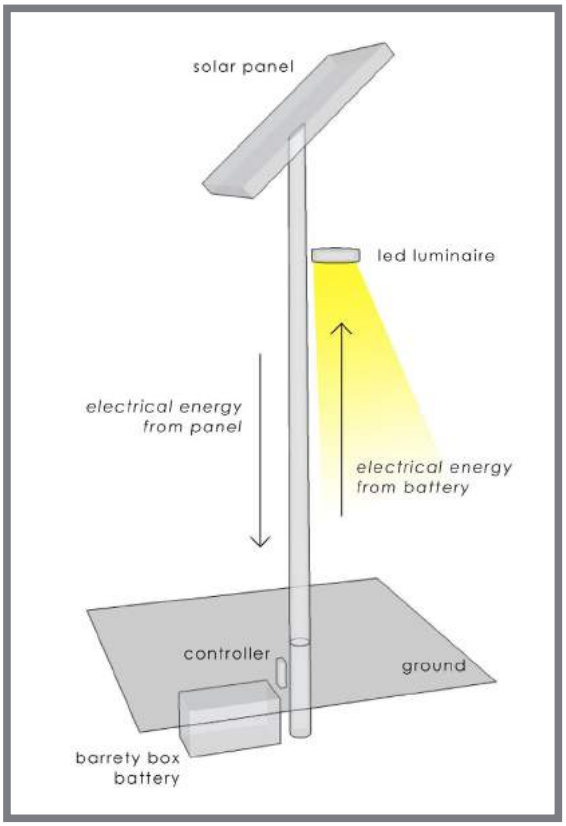

Img. 1-16 System of streetlight with solar panel

There are 3 Types of Solar Street Light Systems [53]: off-grid, grid-tie (single inverter) and grid-tie (micro-inverters). The research “Sustainable feasibility of solar photovoltaic powered street lighting systems” has shown that grid-connected street lights are

the most cost-effective, as the island system requires larger items and consumes the battery faster [54].

1.3.1 Panel

Modern solar photocells consist of chains of photoelements - semiconductor devices - it converts solar energy directly into electricity. The process of converting solar energy into electricity is called the photovoltaic effect [55].
The semiconductor material has to be able to absorb a large part of the solar spectrum. When light quantum are absorbed, electron hole pairs are generated and if their recombination is prevented they can reach the junction where they are separated by an electric field. The thin emitter layer above the junction has a relatively high resistance which requires a well designed contact grid also shown at images 1-17 [56].

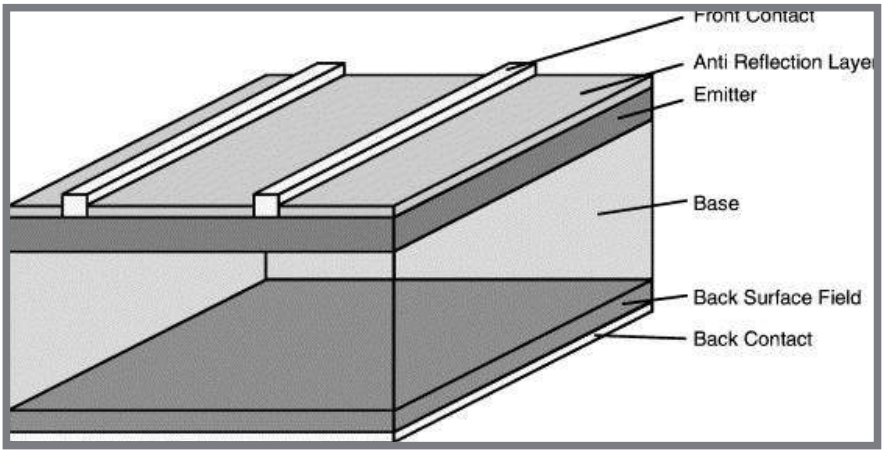

Img. 1-17 Typical solar cell [57]

Solar panels are made from crystalline silicon. Today it is the most common material for the arrangement of cells in solar panels.
The monocrystalline silicon is made by a crucible method or the Czochralski method. A formed huge round silicon crystal is cut into the plate. From those plates the solar battery cell is performed (img.1-18). The main disadvantage of this method is a lot of scraps and a specific form of a single-crystal solar cell - square with cut corners. The polycrystalline silicon is easier and cheaper to manufacture. The polycrystalline silicon is an aggregate of a plurality different crystals, which form a single piece (img.1-19). A thin layer (thin film) silicon is a kind of polysilicon (img.1-20). It is created by fusing thin layers on the top of each other. The polycrystalline lattice is formed. The subsequent cutting is not needed, so it is a cheaper production. But also it is less effective. [58]

Img. 1-18 Monocrystalline silicon [59]

Img. 1-19 Polycrystalline silicon [60]

Img. 1-20 Thin layer silicon [61]

The solar energy market is expanding and there are new types of solar panels: a translucent lithium-ion (Li-ion) rechargeable battery that can charge itself by using the sunlight [62], Kirigami-inspired solar cells [63], spinning solar cells [64]. They claimed the higher efficiency, but the experience of their use is small and characteristics haven't yet been confirmed in practice.
In spite of the complicated manufacture and the high cost, the monocrystalline silicon still dominates the market today and probably will continue to do so in the immediate future [54]. The quality monocrystalline module is more efficient and produces more power in the same size, but polycrystalline modules are always cheaper [56].

1.3.2 Light

Today LED lighting has a clear advantage compared to other light sources. Installing LED street light in North America has shown an improving visibility at night (better color rendering, lighting distributions), reducing lighting in the upward direction (it causes of urban sky glow), reducing energy consumption by 40-80%. [65] The electronic circuit protects the light source against surges up to 1000 V and operates over a wide supply voltage range - from 140 to 265 V. At the same time, there are two drawbacks: the installation of LED-lighting is more expensive and no new set of tariffs for outdoor LED-lighting.
High luminous efficacy (img.1-21), low power consumption, the presence of lamps of different color temperature and CRI allow the use of LED lights in street lights.

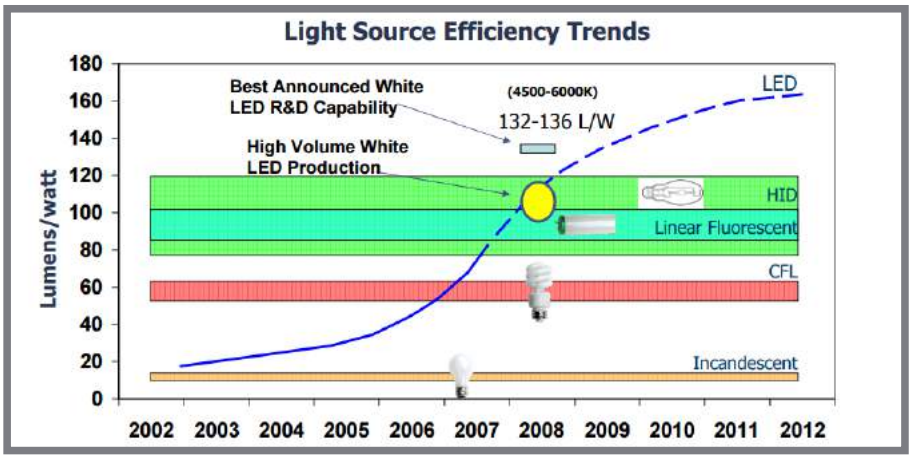

Img. 1-21 LED Performance Over Time [66]

In addition to the traditional form of the lamp, there are street lights reflected light (img. 1-22). This type is used for lighting footpaths, as it has a low power light.

Img. 1-22 Outdoor Streetlight [67]

1.3.3 Charge controllers

1.3.3

Experts recommend the use of a special independent systems contribute to the distribution of the load - charge controllers. These systems help to avoid a fixed chain. They switch models in a serial or parallel modes to compensate for the shaded areas in the device battery or the solar panel.

Sorts of controllers:

- basic (first device on image 1-23)

Designed to protect the battery from overcharge or undercharge. Prevents reverse current.

- PWM (second device on image 1-23)

Controls the amount of current charging the battery. Trickle charge.

- MPPT (third device on image 1-23)

Optimize the power output from the cell. Battery charge to optimal capacity.

Img. 1-23 Different types of charge controllers [68]

Charge controllers and other electronics need to be as efficient as possible to maximize the benefits. MPPT compensates the changing voltage versus current characteristic of the solar cell to increase the efficiency [69].

1.3.4 Common

Not only the brightness of the lighting is governed, but also the location of the poles, the distance between them, the foundation and the selection of the bracket.
Street lights are available in three categories:

- Landscape lighting function is performed primarily decorative lighting paths, trails, gazebos.
- General placed on the high street basics to cover a greater area without the use of lenses.
- Architectural lighting is used to highlight certain elements of information objects, advertising and fountains.

The scope of application defines the variant of the design support. The type of support is selected considering the cost of material. Today, there are metal supports for the external illumination (cast iron, galvanized steel, aluminum), as well as wood, plastic, composite supports. The non-metallic supports are usually used for a decor. Regardless of the type, all supports for lighting must have high strength and be resistant to climatic influences.
All types of support should be optimized for the wind up to 160 km/h. For the general street lighting steel or reinforced concrete foundations are used. They have the polyhedron or a circle in a cross-sectional hollow. They are lightweight, safe and durable. Compared with reinforced concrete poles or lattice columns it requires less costs of installation and maintenance. Supports taper upward, thereby reducing the build-up in the wind. A galvanized metal rack (height 3-12 m) is used for street lighting and parks, residential areas, shopping areas, places of recreation and accumulation of a large number of people. The column has a flange for installation on an underground part or a foundation, on the top there is a unit for the mounting bracket.
The foundation supports of the street light could be a concrete foundation or an underground mounting block. Its size depends on the installation location, soil characteristics, weight, height and column conditions, the accommodation must ensure the safe operation of the street light. Its depth must take into account the freezing of land and

be 30 cm longer. The flange without support at the bottom is mounted in special pit and poured by the concrete. [70]
As for the location of the solar panel there are two types:

- combine solar panel and lamp (img. 1-24)
- separate solar panel and lamp

Img. 1-24 Solar panel combined with lamp [71]

1.3.5 Battery

1.3.5

Chinese solar street lights often use gel lead acid batteries. This type of the battery is cheaper than other batteries and weight makes no difference. Also, lead acid batteries are very easy to recycle. Some special designed batteries are maintenance free.
Other modern type of a battery is the nickel metal hydride battery that provides stability, durability and performance. It has 10 to 12 year lifespan and 3500 charge cycle. 100% depth of discharge far exceeds older lead-acid technologies. Operating range from -20C to +70C ensures optimum performance in most climates. Also it's easy to ship and recycle.
The most important advantage of the lithium-ion is a high charge and discharge efficiency, that helps to harvest more energy. Lithium-ion batteries save up to 70% in space and 70% in weight compared to lead-acid. It has 3000-5000 charge cycle, operating range from -20C to +60C [72]. Lithium-ion batteries are more expensive than lead--acid, but can be compensated by a longer service life, weight or size considerations, high reliability and efficiency. According to the report of the US lithium-ion batteries are the most popular batteries, regardless of the application.
The battery can be placed in the box at the bottom, on a pole, be hidden in the case with a panel and light or be placed underground (img.1-25).

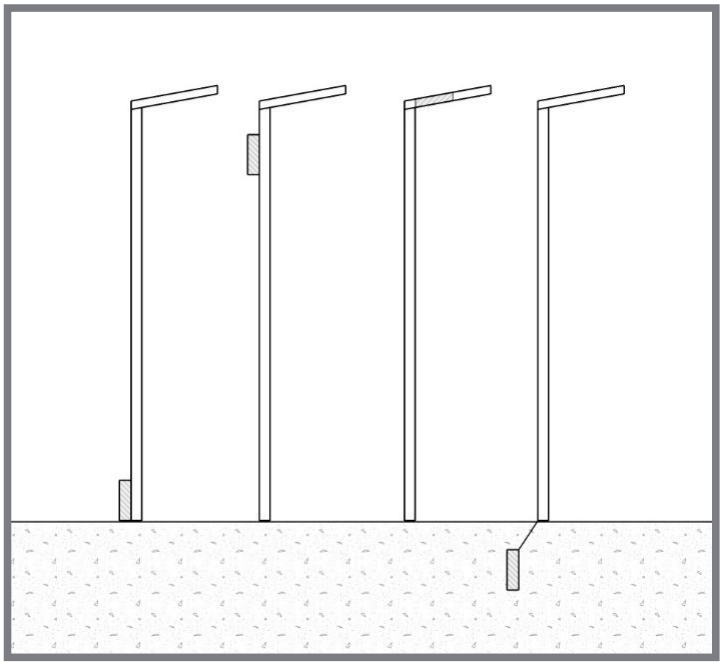

Img. 1-25 Disposition of battery

1.3.6.Solar street light specification

Solar street light system: Grid-tie (micro-inverters)
Solar Array: Monocrystalline silicon module
Light Fixture: LED
System Controller: MPPT
Battery: Li-ion

2 ANALYSIS OF THE PROBLEM AND AIM OF THE THESIS

2

Today, street lighting with solar panels often can be seen on the roads outside the city (lights with self-service "island" system). The offers in the retail market are focused on the household. They have a functional design and are not decorative. Designer lights are sporadically installed in public places. There is also a large number of design concepts, but most of them cannot be realized due to the high cost and technical implementation difficulties.
The street lighting with solar panels is used in Europe, but it is not widespread. Most people do not face them in their daily lives and cannot appreciate its practical and economic efficiency.

2.1 Technical issues

3.1

- Design the optimal constructional solutions (the size and location of components)
- Determine the type of street lighting
- Determine the control system
- Determine the type of battery
- Determine the material and the lamp cover
- Determine the placement of the solar panels, its size and position
- Determine the type of lighting

2.2 The aim of the thesis

3.2

The theme of the final work is street lighting on solar energy. The main purpose is to offer a design solution of a lantern for residential areas. Attention will be paid to the project's compliance with city's environment for a long period of time and increase the efficiency of solar panels.

- Attractive design and longtime use
- Compliance with ergonomic standards
- Compliance lighting
- The use of modern materials
- Anti-vandalism

Technical specification:
- Height of 4-6 meters
- Power 60 watt
- GPS system or PID control
- LED light source
- Lithium-ion battery

3 VARIANTS OF DESIGN STUDY

The design was based on the performed analysis (chapter two) according to the stages and principles of design. [73]

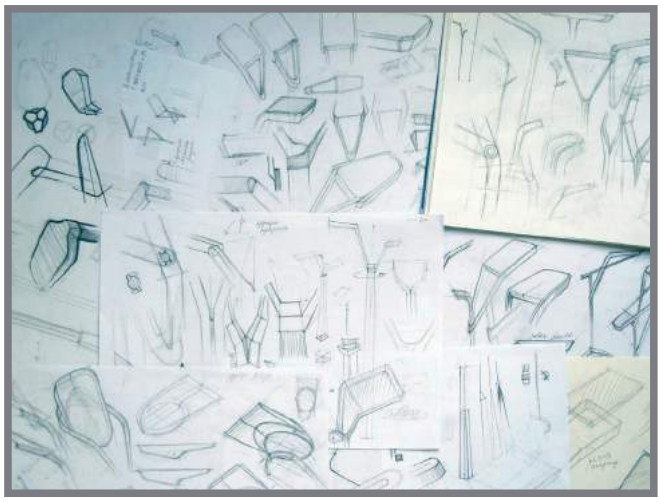

Img. 3.1 First stage of sketching

The design of this project determines the shape of a lantern — the size and position of elements. Another factor is the matching of units of street lighting with miscellaneous urban environment and the ability to use for a long time (several decades). Preference was given for simple forms and lines, not contrasting with different styles of architecture. During the analysis the three design options were selected. They are presented below.

3.1 Option 1

The lamp has a Z-shaped dynamic form. At the top is a solar panel and a light source, combined in a single package. The battery is located in a pyramidal base.

Img. 3-2 Option 1

The upper body can change the position of the angle, thus changing the tilt of the solar panels, depending on the season. The battery and controller are located at the bottom. It is convenient for maintenance, replacement or repair of the battery.
The case materials are steel and aluminum. The material determines the color of the lamp. The surface texture and highlights emphasize the shape of the lamp.
The lantern has a distinct character and dynamic forms. This option is suitable for a modern architecture, but it will "argue" with the architecture of the old quarters. The large size of the base covers an area of pavement, reducing the pedestrian zone. Due to its size, the base may be subjected to vandalism - graffiti or posting advertisements and announcements.

Dimensions: 5000x610x580 mm

Img. 3-3 Details

3.2 Option 2

3.2

Streetlight shape is formed by simple geometric objects – the two intersecting curves in the shape of an inverted letter "L". The design of the lamp includes the reflector. It is located on the top of a lamp in the same housing as a solar panel.

Img. 3-4 Option 2

Two metal columns of square section are used to support lamps. On the top of the larger pole is a housing with a reflector and a solar panel. The lighting unit is located under the reflector. The use of the reflector gives a softer and diffused light. The battery is located in the rectangular base of the lamp, which is convenient for service and repair.
The case material – powder-coated steel, the reflector material - aluminum. Powder coating protects the lamp and determines a dark color.
The disadvantage of this design is an inefficient use of solar panels. Since the panel and reflector combined in one housing, the solar panel cannot change the angle.

Dimensions: 5000x1000x530 mm

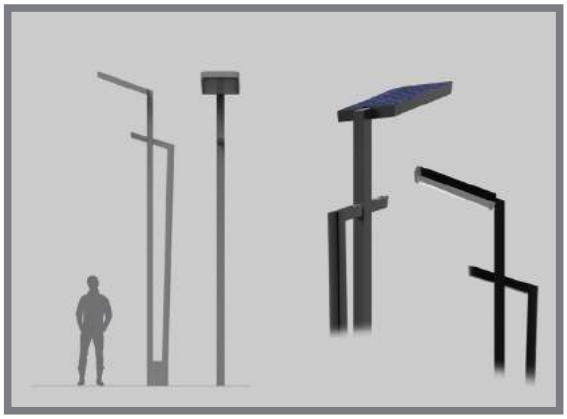

Img. 3-5 Details

3.3 Option 3

The curved organic form of the lamp in the style of biomorphism emphasizes the ecological idea. Curved metal pipes serve as a support for two buildings in which the panel and the light source with the battery are located.

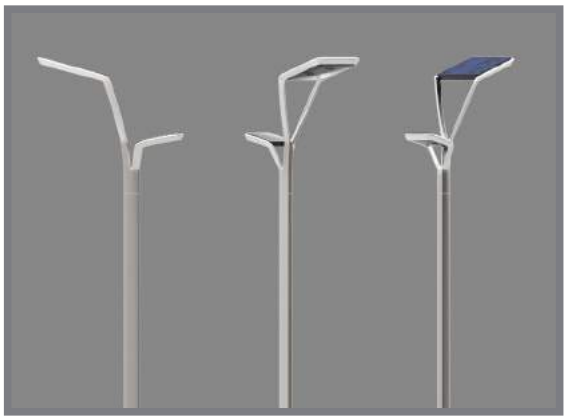

Img. 3-6 Option 3

The solar panel is located in a larger housing. There is a lighting unit and the battery in a smaller case. Both elements lie on the metal frames of steel. The steel determines

the color of the lamp; the housing is made of aluminum.
The disadvantage of this option is the location of the battery on the top of the structure, this requires additional maintenance equipment. Moreover, the solar panel is static, that reduces its effectiveness.
This variant was chosen for further development as its form embodies the idea of sustainability and ecological compatibility of this type of the street lighting. The panel layout problem will be resolved in further work on the design.

Dimensions: 5000x1500x600 mm

Img. 3-7 Details

In the next stage, using the tools of sketching and 3d modeling new design options we offered, allowing you to change the angle of the solar panel.

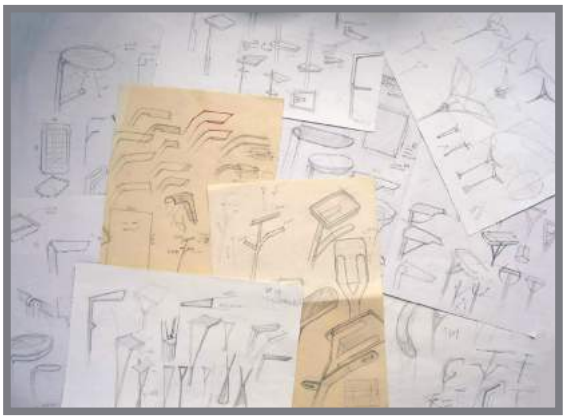

Img. 3-8 Options of construction

For further development were selected options shown in figure 3-9 and 3-10. Figure 4-9 shows a variant with the panel, changing its position relative to the frame. The case with a light unit can move across the pole of the lantern. This option has a visual disadvantage – from some points of view the top of the lantern may seem broken.

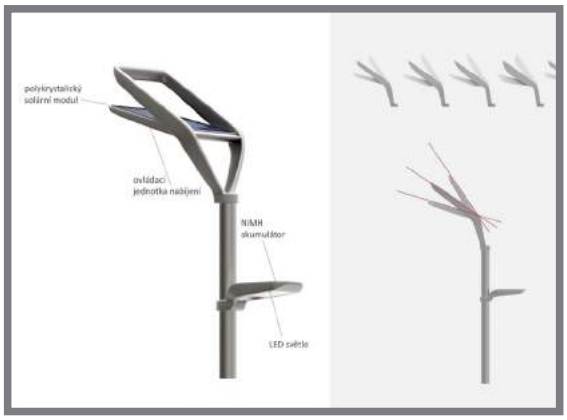

Img. 3-9 Option with fixed frame

In the design of option 3-10 the frame changes the position with the panel. With this solution, the design looks unified and durable. In the course of the project we have been proposed various options for housing design and frame connections with the post.

Img. 3-10 Option with movable frame

Img. 3-11 Options of the shape

One of the directions of searches of the form was biomorphism. From this path it was decided to decline to avoid excessive decoration, which could cause visual disharmony against the lamp-surrounding architecture.

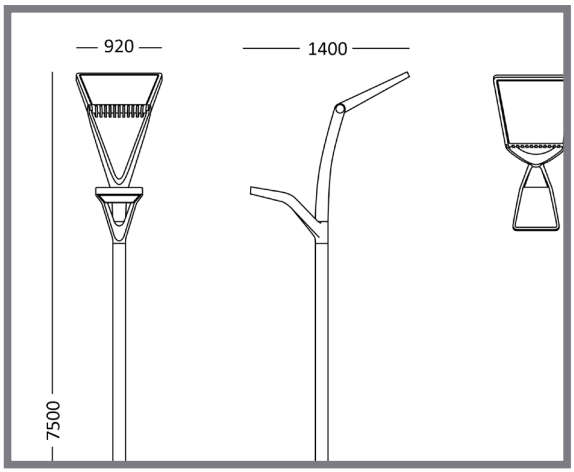

Img. 3-12 Sketches

4 SHAPE SOLUTION

4.1 Solution of the form

This design is the result of the development of the third version of the design in the style of biomorphism. As analogues considered in the design analysis, the design of the lantern interprets the idea of the solar tree. Unlike the Ross Lovegrove [6] and Vinaccia project [8] the lantern will be used in residential areas, so it is more utilitarian object. Lanterns will be used in different environments and different architectures, so the design doesn't have a large amount of details and forms of a complex volume, which can enter into a dispute with the surrounding architecture.

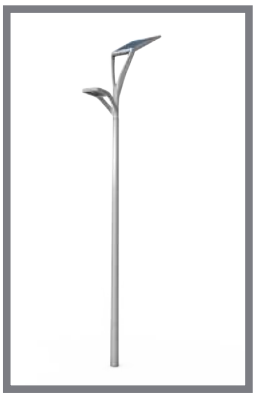

Img. 4-1 Form

4.1.1 Proportion

The proportions of the lamp are most significantly influenced by its structural device. The main volume is at the top — where the solar panel is located. The panel's volume balances the light element and a microcontroller, which are placed in a separate enclosure according to the technical solution. The height of the lamp is grounded on ergonomic lighting standards.

4.1.2 Composition

Biomorphic basis of this project is the plant and its elements — leaves, trunks, stems and branches. The shape of the lantern is a pillar, curved to the top, where it takes the form of a frame for two buildings. In this case, the pole of the lamp corresponds to the stem and imitates its form. Two housing can be perceived as the likeness of the leaves. The lantern has a smooth flowing forms and subtle joining of elements to create a sense of a common design and reduce visual noise.

Img. 4-2 Composition [74]

4.1.3 Details

The separation of elements in two housings due to their technical characteristics (temperature modes). There is a bar in one case. There is a unit lightening, voltage regulator, a microcontroller and a motion detector in another.
The small case is a proportionally reduced form of the case with the panel, compositionally balancing its massiveness.
The big case is connected to the frame. This construction is movable relative to the post. This is due to the technical characteristics — the change in angle increases the efficiency of the panel during the year. The mechanism for adjusting the angle of panel is hidden under the cap, and the item itself is at high altitude, so the frame with the column is treated as a single unit.

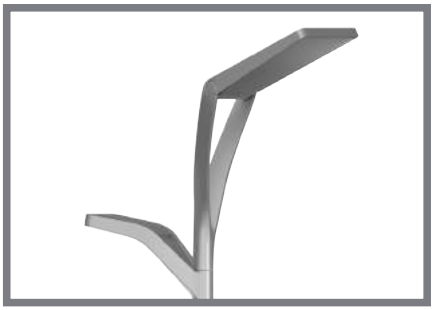

Img. 4-3 Shape of the frame

This effect contributes to the bending of the pole — it is designed to visually continue the line formed by the vertical position of the panel (for the winter mode). In other provisions the connection case-pillar also looks harmonious.

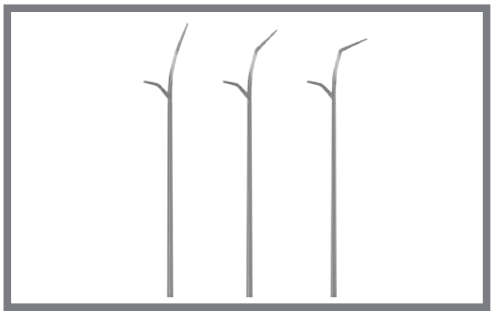

Img. 4-4 Angle of solar panel

Ventilation is a necessary condition for the efficient operation of solar panels. The ventilation pattern repeats the pattern on the leaves and goes well with the body shape of the panel.

Img. 4-5 Ventilation pattern

The small case is a smaller replica of a big case. The shape and location of the housing meets the given direction of simplicity and brevity — it copies the form without overloading the lantern with unnecessary visual details. The main volume has a trapezoidal shape. The shape of the housings extends to an outer edge copying the frame. It is a simplified version of a leaf and helps to create a single volume.

Img. 4-6 Top

The form of support - “the plug”. The place of bifurcation of the post copies the link of leaves and visually forms a triangle extending from the pillar to the outer edge of the panel. Through this decision the panel and the supports look like one unit. Another unifying detail - edges of rigidity. They lie on the curves radiating away from the bases of the supports to the edge of the panel.

Img. 4-7 "The plug" shape

5 TECHNOLOGICAL AND ERGONOMICAL SOLUTION

5

Street lights are used for lighting of roads and sidewalks, pedestrian areas and squares. The street light complies with the standards of all lighting classes for technical road lighting ČSN EN 13201 [75].
The basic version is designed for residential quarters. This corresponds to the situation lightening D4: the area is the total shared area bounded by the facades of buildings directly bordering the area or the property limits of premises bordering the area. The focus is on the pedestrians' or cyclists' safety. For this class the design of lantern is important, as the street lights form the look of the street. Complies with lighting class - S4 (S3).
Options are also designed to lighten the situation E1. Relevant area for lighting situation sets E1: the area is the total width of the defined footway, footpath or cycle path. Street lights for this sets also have a decorative function, and must comply with the surrounding architecture. Lighting class - S4 (S3) [76].

Img. 5-1 Streetlight for the lighting situation E1

5.1 Structural and technological solutions

5.1

The following design solutions were developed at the base of the lantern design:

- Grid-connected system
- Modular system
- The disposition of elements in different cases
- Changing the angle of solar panels location during the year
- The system on and respond with the help of the sensor
- Sustainable design

5.1.1 Project size

5.1.1

The angle of the panel affects the height and the width in space. Size of the street light can differ in various spaces from 7600x1200x900 cm to 7200x1700x900 cm. The street lights for pedestrian areas and squares (lighting situation D4 and E1) have the same specification and range of sizes.

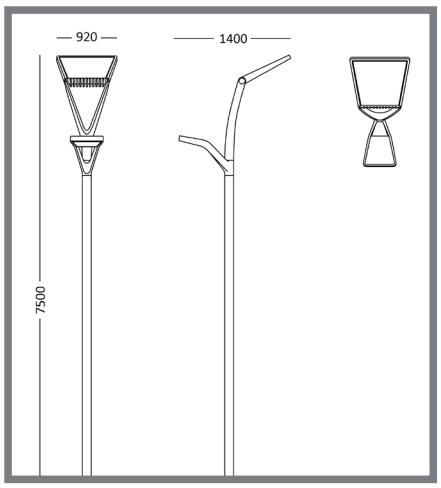

Img. 5-2 Size for settings on 60°

5.1.2 List of elements

Parts diagram is showed on img.6-3. The basic elements are arranged in two cases at the top of the lantern. Monocrystalline silicon panel (1) is located on a big case fixed in a metal frame. The panel converts light energy into electricity via photovoltaic effect. The lower case contains the light source (2) and sensors responding to movement (5). Sensors responding to light (6) is placed on a big case. The intelligent control system enables adaptation of luminous flux according to needs and lowers operating costs. The battery (4) and charge controller (3) is placed in the lower part of the column body for easy service or replacement access. The battery is a repository for solar panel energy and a power unit for LED.

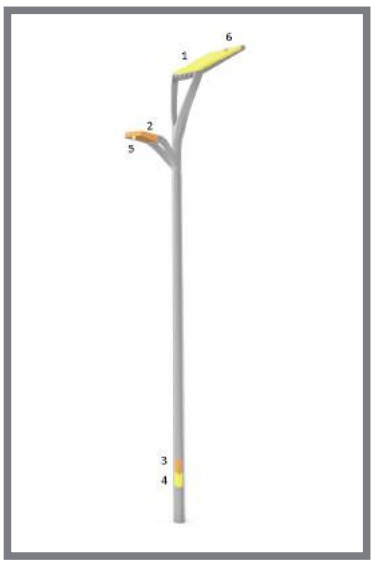

Img. 5-3 Parts diagram

5.1.3 Modular system

Streetlight is a modular system — the solar units and light modules are placed in separate modules. The height of the lanterns and configuration can be adapted to specifications. The thesis work considers the street lamps for two lighting systems, but the

alternative for other lighting system can be designed on the basis of the established design. Therewith although the modules have a long service life, elements can be replaced by more efficient if necessary.

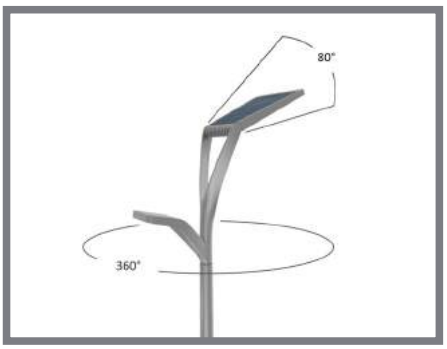

Img. 5-4 Movement of elements

The light source and the solar panel are mutually independent elements. Due to the mobility of the frame with respect to the column, the light source may occupy any position and be accurately directed to the place of light. The solar panel thus will be set in accordance with the sun movement path.

Img. 5-5 Options of installation

5.1.4 Adjusting the tilt of solar panel

5.1.4

The sunlight as an energy source has several drawbacks - a low density, discontinuity and changing continuously on the space distribution [77]. Solar tracking can improve the collection and utilization of the solar energy and increases the efficiency of the panel.
The sun is higher in summer and lower in winter, so adjusting the tilt of the panels can capture more energy during the whole year. Image 6-6 shows the effect of adjusting the angle of solar panel for 40° latitude (78). Each option is compared with the energy received by the best possible tracker that always keeps the panel pointed directly at the sun.

	Fixed	Adj. 2 seasons	Adj. 4 seasons	2-axis tracker
% of optimum	71.1%	75.2%	75.7%	100%

Img. 5-6 Efficiency table [79]

The graph X shows the effect of adjusting the tilt (these figures are calculated for 40° latitude).

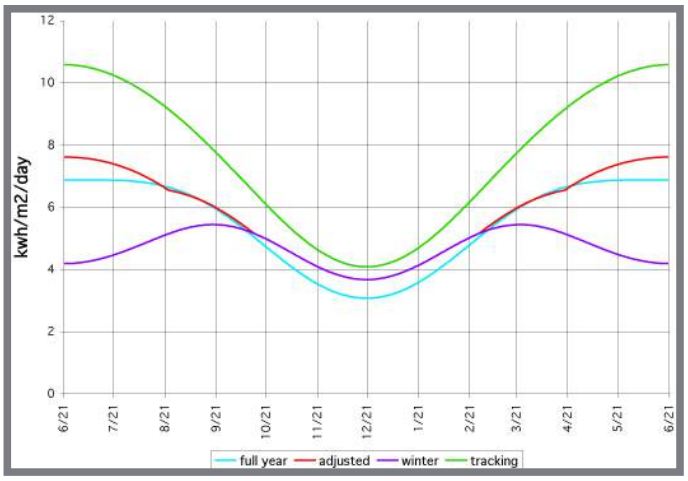

Img. 5-7 The effect of adjusting the tilt [80]

The bar changes the angle of tilt along with the frame. The Maximum angle is 68° and it corresponds to the winter position, the minimum angle of 21° is set for the summer. An intermediate value 46° corresponds to the spring and autumn situation. The angular tilt value is given for longitude and latitude of Brno. For other fitting locations the calculation can be done using the Photovoltaic geographic information system [81].

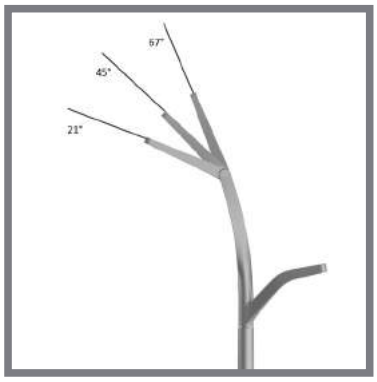

Img. 5-8 Change of panel angle

The frame has a knuckle joint and tilt range from 0° to 80°. The panel can be adjusted by means of a bolt and a jaw coupling, ensuring the locking of the frame. The change in the slope is carried out by a repair worker 4 times a year.

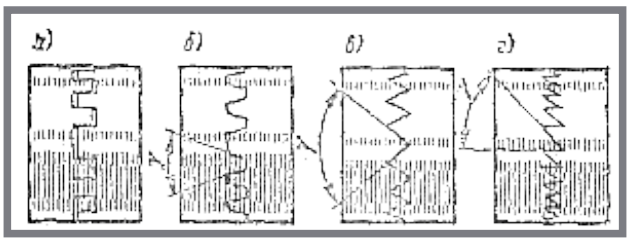

Img. 5-9 Jaw coupling

Img. 5-10 Connection between case and frame

This design solution meets the concept of organic design — the design that is subordinate to the conditions of the natural landscape, in this case - the climatic conditions of the environment and its insolation [83].

5.1.5 Ventilation of elements

5.1.5

Effective cooling system ensures long lifespan of the lamp and low maintenance cost. Thermal management helps to save energy, because the better the LED is cooled, the better the value of a lighting parameter (the ratio of luminous efficiency per watt). Ventilation is an important element of the case and solar panel. Overheating of monocrystalline silicon solar cells affects the output performance.

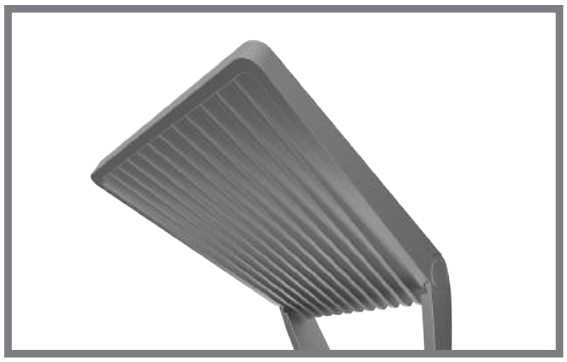

Img. 5-11 Cooling fins

According to the research carried out in Turkey, about 2% loss of power was justified by heating the photovoltaic panel [84].

The physical principle of convection is used to dissipate heat generated by the LEDs and the panel. Convection describes the movement of the flow produced by pressure differences. Cool air flows past the hull on the sides and rises, dissipating the heat. The cooling fins inside and outside the shell expand the surface area of the body and thereby improve heat transfer. The distance between the ribs and their location under the solar panel doesn't allow leaves or debris to be trapped between them. Fins cooling LED are located within the housing. LED cooling fins is arranged inside the housing. Aluminum small body has a flat surface, allowing dirt and dust particles to be washed away by rain and does not affect the heat transfer.

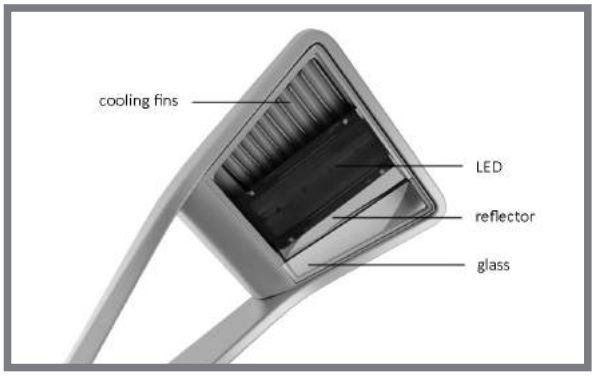

Img. 5-12 Cooling fins inside case with LED

5.1.6 Street installation

According to the research “Sustainable feasibility of solar photovoltaic powered street lighting systems” [54] the more cost-effective street lighting system is grid-connected system (island system is more expensive in 2-4 times). The distance between the lights is calculated according to the optical data and the class of lighting. Lanterns for D4 and E1 classes have the following characteristics [85]: the size of the illuminated field 6000x6000 cm, the distance between the lights 24000 cm.

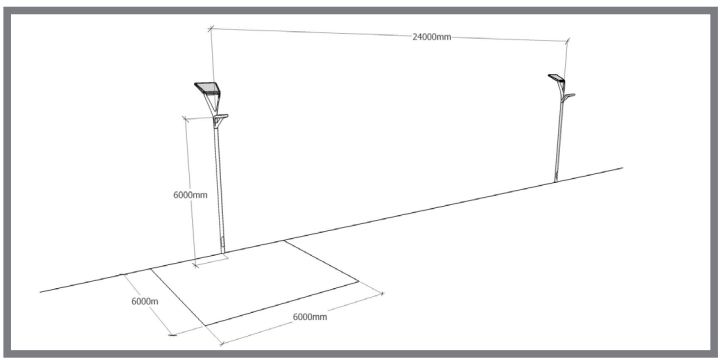

Img. 5-13 Diagram of street installation

Lanterns location options are presented in the picture 5-14. When installing lamps, you need to consider the presence of trees and their future growth [86].

Img. 5-14 Street installation

The street light has reinforced concrete foundations. The base of the lamp serves as a support and connects it to the electrical circuit. Height of buried part of the pole — 800 mm, base diameter — 200 mm, slot for feed cables is 150x50 mm.

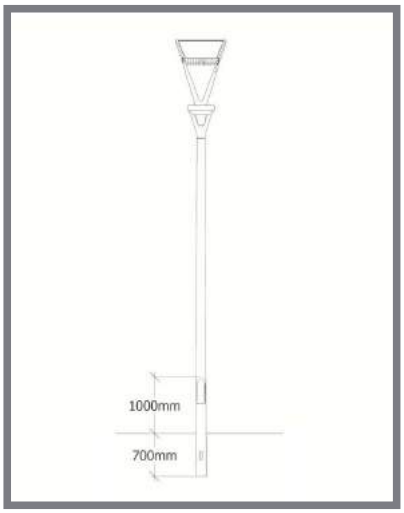

Img. 5-15 Foundation

The lantern has a cylindrical pole, therefore, information elements (scoreboard, signage, signs) can be attached in a standard way using the bracket.

Img. 5-16 Information element

5.1.7 Elements

Specification and characteristics of elements is selected on a basis of model Solar LED Street Lights EM-SSL-K040 [87]:

- Lighting situation D3 (E1)
- Solar panel polycrystalline silicon 12V60W
- Battery Li-ion 12V/30AH
- Charge controller MPPT 12/24V
- LED Lamp 40W

The connection diagram is shown in figure 5-17.

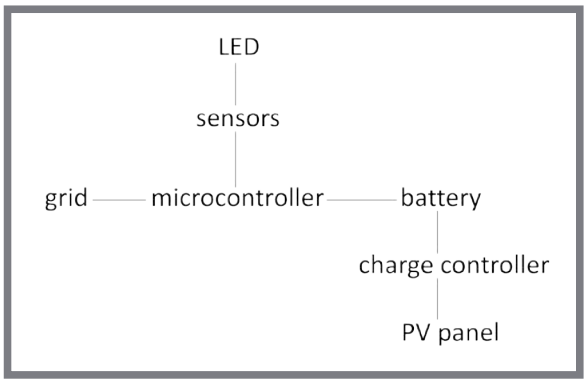

Img. 5-17 Connection diagram

5.1.7.1 The solar panel

The type selection of the panel is due to the design. The panel enclosure has a trapezoidal shape, and polycrystalline panel may occupy a large area and accordingly generate more energy. Thus the polycrystalline solar panel was selected despite the fact that it costs more than the monocrystalline panel [54]. The panel size is 4557 cm². Weight is approximately 6.5 kg [88].
The modular system allows to change the panel to a more efficient and productive in the future. Today the market of solar panels is growing, studies have the financial support and the discoveries of new types of solar panels with a high efficiency are continuing.

5.1.7.2 Battery

The XX will generate the required amount of power under any circumstances. The battery capacity allows to work for a period of three days without the sunlight; during which the XX will produce a sufficient amount of light in the night. The selected battery type - LiFePO4 battery. The battery's life cycle is 2000 times. Размеры батареи могут быть изменены, вес батареи 3.5 кг [89]. The battery size can be changed; the battery weight is 3.5 kg [89]. The battery is mounted in the housing, protected from weather conditions. Battery access is fulfilling through a door at the bottom of the post.

5.1.7.3 The battery charger

5.1.7.3

The battery charger charges the battery from the solar module and turns off the solar module when charge reaches 100%. Maximum Power Point Tracking (MPPT in short) system allows PV panels to output more power (by 10-30%) by adjusting working condition of the electrical module [90]. The module has dimensions of 193x110x48mm [91].

5.1.7.4 LED

5.1.7.4

The STREETLIGHT IP module is used as a LED source [92]. The light module ensures high visual comfort and high performance optics.

Specification:

- Color temperature 3000K
- Total useful luminous flux 3700 lm
- Nominal lamp life time 100000 h
- Dimensions 310x154x40 cm
- Product weight 1135.00 g

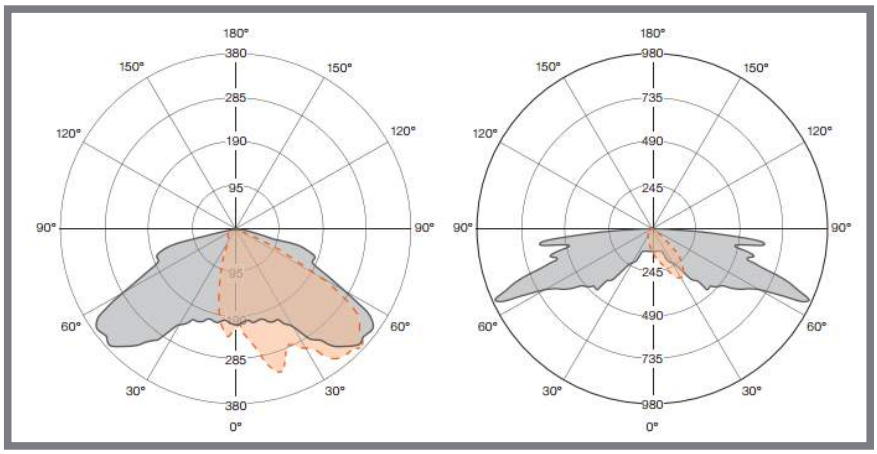

Img. 5-18 Light distribution [93]

5.1.7.5 The pole

5.1.7.5

The lantern has a cylindrical form, widening towards the bottom. The post has no sharp edges, which promotes safety. Pole is made from hot galvanized steel. The frame and the housing are made of cast aluminum. The metal provides structural strength and weather resistance to the wind. The pole has a cylindrical shape with 150 mm diameter and 5 mm thick. The post has a small base diameter — this reduces the area available for vandalism (graffiti as in img. 1-1).
The smooth metal surface reduces the accumulation of dirt particles. The lamp is dustproof and waterproof (protection class IP65 and IP67). In addition, the LED light almost does not attract insects, which would otherwise constitute an additional factor of pollution for the lantern.

5.2 Ergonomic solution

5.2.1 Ergonomic category

The ergonomic design of street lighting is focused on high visual comfort, lighting quality and convenient access during the service. The work does not include a lighting unit module design.
The person as a flashlight user has no direct contact with it, so the lamp hasn't an ergonomic category. [94]

5.2.2 General requirements

Any types of street lights meet human needs arising outdoor where the lamp is located. There are requirements of the following types: traffic safety, visual orientation, visual comfort, face detection, a general sense of security: safe movement, visual orientation, visual comfort, facial recognition, a general feeling of safety. These requirements apply to all types of roads. [95]

5.2.3 Traffic safety and visual orientation

The concept of the visual comfort contains two ideas: the concept of freedom from glare and the concept of pleasantness. The European Standard on Road Lighting provides 3 methods for controlling glare: Luminous Intensity Classes, Threshold Increment and Glare Index Classes. Luminous Intensity Classes are most often used to control glare in urban lighting. The system controls glare by restricting the light output of luminaires at particular angles. [95]
According to this streetlights classification for urban pedestrian areas — Intensity Class G6.

5.2.4 Light pollution and visual comfort

Urban lighting has many benefits, but it can also cause problems. Most of the problems associated with lighting is the problem of light pollution.
Light pollution is a phenomenon caused by the upward flow of light from lamps with poor optics. Lantern Medala gives only direct light to the side of roads, in accordance with the requirements of European standards, thanks to the LED module.

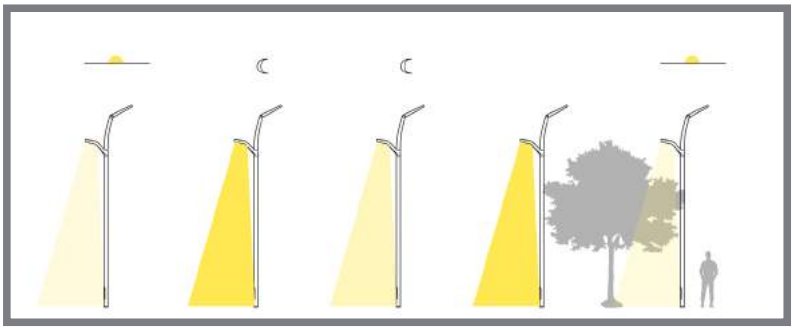

Img. 5-19 The operating time of the lamp

Another step to reduce light pollution — lighting mode that uses the microcontroller and the sensors. The microcontroller and sensor ensure optimum performance flashlight when and where you need it. At night between 1:00 AM and 5:00 AM, the pedestrian and transport activity is very low or absent [23]. At this time, the ability to darken or turn off street lights is necessary to reduce light pollution and to save significant amounts of energy. The lantern flares up at dusk and goes out at dawn. After midnight, when the number of people and vehicles is reduced, the lamp goes into the mode, dependent on the presence sensor. This allows to save electric power and increase the service life of the clarification elements.
The microcontroller adjusts the operating time of the lamp (on and off) depending on the season and takes readings from the solar panel and all elements, in order to monitor their effectiveness.

5.2.5 Lighting Color

5.2.5

The LED with a color temperature of 3000-4000K is used for lighting. One of the characteristics of LEDs is that they retain their color temperature constant, even when the light intensity is changing. While in halogen lamps two variables are completely dependent on each other. The generated beam of light has no color aberrations. Optical improved light output ensures a low consumption and a long lamp life that reduces CO2 emissions.

Img. 5-20 Colour of lightning [96]

5.2.6 Maintenance and service

5.2.6

It is important to maintain the lighting system to make sure it works effectively. Broken lights can send a message to street users that environment is deteriorating and an area is not considered important.
Pollution is an important problem of solar panels affecting their efficiency. Therefore, lights with solar panels require periodic service and cleaning. In winter, the angle of solar panel and the heat generated by the panel prevents snow accumulation on the surface [97].
To facilitate equipment setup, repair or elements replacement two top housings of the lamp have screw connections.

Img. 5-21 Scheme of parts

Access to the batteries is provided through the hole in the bottom of the post. In addition, this hole gives the access to the wires when connecting the lantern to the street network. The height of the door position is 100 cm (img.6515).

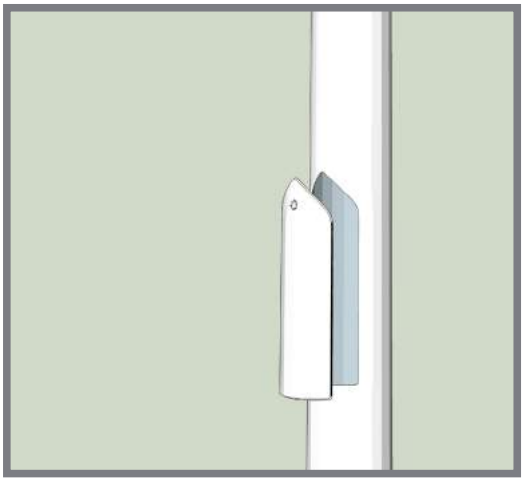

Img. 5-22 Door

6 COLOR AND GRAPHICS SOLUTION

6.1 Color solution

The color of the lights is utilitarian — it needs to approach different architecture, characterized by different materials and colors. Traditionally street lighting has a gray or black color (rarely white). This color scheme is substantiated with material from which to create the torch body — most often it is steel or aluminum, having a grey color. The old lights are black.

Img. 6-1 Existing streetlights

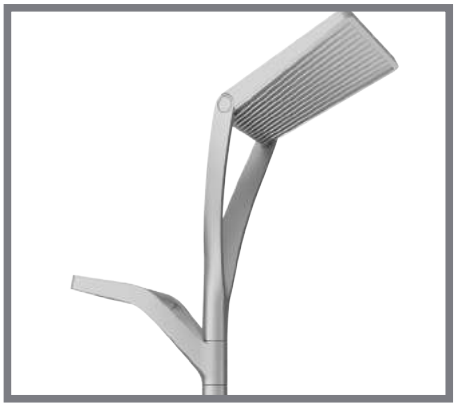

Img. 6-2 Color

The lantern has a single color - it emphasizes the shape and lines. The pillar material is steel. The pole is coated with a powder coating of a gray color. Housing and frame of the lantern is made of cast aluminum with anti-corrosive coating. Protection class IP67 IK08.
The top panel of a big case color is determined by the color of cells and solar cells modules. The modules have a dark blue color, the grid is also dark black, so the surface of the case is also decided in a dark color [86]. Therefore, the surface of the body is considered as a single surface.

6.2 Graphics – logo

The shape of the logo is associated with a pattern of solar panels and the solar symbol of the sun. The logo is formed by 4 arrows pointing to the center.

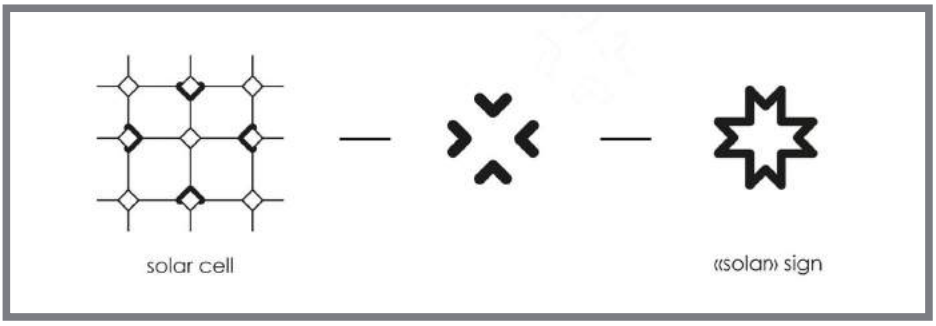

Img. 6-3 The shape of the logo

In communication – advertising or brochures, the logo can be used as a signature pattern and a graphic element. In the center of the enlarged logo an image of a light or a banner message can be placed.
Brand colors: yellow, gray and black repeat the colors of the lantern. The logo has a yellow color, characteristic of the sun. This color is characteristic of the industry and thus directly helps to define the scope of the company. Grey holds back the brightness of the yellow color, giving it the weight and making it more official.

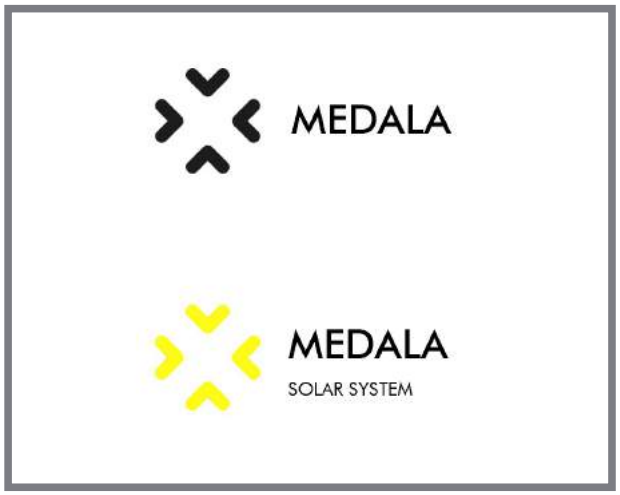

Img. 6-4 Logotype

Streetlight with solar panel is named “Medala” by the plant Medinilla Speciosa. Shape of the plant was main inspiration during designing process.

7 DISCUSSION

7

Street light Medala was designed under the influence of the following three factors: environment, economics and sustainability. The project meets the modern requirements of the society and supports the conscious use of energy by organizations, companies and the municipality.

7.1 Psychological function

7.1

7.1.1 Biomorphism and human perception

7.1.1

Design forms are inspired by biomorphism. It emphasizes ecological heading of the project and makes a good impression towards users.
Solar panels are the embodiment of alternative energy, therefore, associated with the environment. When people see solar panels in everyday life, they often think about ecology, which likely affects their behavior. Some customers for this reason, prefer street lights with solar panels like grid-tie micro-inverters [53].
Seeing architecture or design as an anthropomorphic, zoomorphic o biomorphic category is a subject for perceptual psychology. One aspect of perception of biomorphism is association theory and its early starting-points “empathy” and “association”. All psychological events are made up of “elements”. Experience is filtered through “association” — a linking of space and time [9]. Emotional perception is the main way to assess the design of the flashlight by the user, since man has no direct contact with a flashlight and could not affect its functionality. The other method of communication available for street lighting — the feedback [98]. In a power saving mode, the operation of the lamp is controlled by the sensor that responds to movement, and the flashlight only turns on when object is approaching.

7.1.2 Safety

7.1.2

The modern city is a complex structure made up of buildings, roads and open spaces. It is imperative that the city was properly illuminated at night. The city lighting promotes orientation, stimulates and gives a general feeling of well-being and security. The street light weakens the fear of crime and makes the environment psychologically more inviting, that provides better amenity.
Generally believed that lighting can contribute to a general feeling of security. But the research of Painter and Farrington [99] reported that lighting has little effect to the area with a low crime rate, and research of Raynham and Gardner [100] found that additional lighting did not diminish the perceived fear of crime.

7.2 Economic function

7.2

7.2.1 Target Group

7.2.1

The government has a social task to provide sufficient lighting for the city, thus ensuring the safety of public places. Street lighting systems consume 43.9 billion kW h electricity every year [54]. The solar street light provides a solution for no consuming electricity. The use of lamps with solar panels is an environmentally responsible step

and can be supported by the budget allocated to the development of alternative sources (according to Chapter1.2). This means that the project will be in demand.

7.2.2 Price category

The price category of the product is above average. On average such lights cost . The cost of this project is about $ 950. This price is valid as the flashlight is positioned as a design product (which increases its value) and will be used in residential areas and public places - on the exterior of such spaces a bigger budget is usually allocated.
An additional motivation of the buyer can be a prospect of reducing the costs (and then their deletion) of electricity.

7.2.3 The feasibility of installing

Today, solar-powered lighting is set not only by developing countries at the equator. In the US, solar lights "island" systems are installed in residential areas, where it is important to maintain the security and infrastructure, that can be damaged by conventional light sources. In the same Forbes article [101] it is referred to the lanterns with solar panels weather conditions (hurricanes) resistance.
This project represents a lantern with solar panels connected to the network, as it reduces its cost (less powerful elements), and allows you to return excess energy to the network to cover the domestic needs.
As for the weather, the solar panels are already widely installed on the roofs and are used to power a home or a public network. Statistics of the solar power plant installed on the roof of the Pedagogical Faculty of Masaryk University in Brno [102] shows that the generation of electric energy falls in winter.
As mentioned in Chapter 6, this problem is solved by changing the angle of the panel throughout the year.

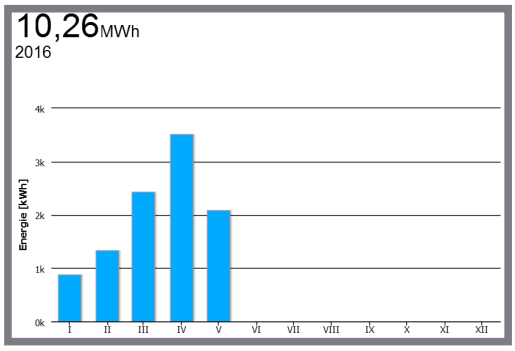

Img. 7-1 Production of elektricity during year 2016 [103]

7.2.4 The length of life

Street lamp Medala is designed to have a long and useful life in open spaces. All metal parts are covered with powder coating, which resists rusting, chipping, peeling and fading and does not require subsequent cleaning with a solvent. As required, the surface can be cleaned with water and soap.

Working hours of main elements: the panel - for about 20 years and the battery - 5 years, LED - 10-12 years. The lamp can operate without replacement of elements for at least 5 years, then when saving corps, deprecated elements are easy to replace.

7.4 Social function

7.4

7.4.1 The impact on the district

7.4.1

Lights affect the surrounding space in two directions — the development of social and economic relations and security increase.
The economic life revivals due to the street lighting; the visual comfort and psychological atmosphere improves, which positively affects the health and performance of residents; the social prestige of the city and its authorities increases [104]. There is a decrease in emergency situations, criminal activities and vandalism.
About half of all fatal traffic accidents occur during the hours of darkness. Work by the CIE (CIE 93-1992 Road Lighting as an Accident Countermeasure) examined the data on road traffic accidents in a number of countries and found that street lighting reduced the number of accidents at night by 30% [95].
Street lights create a distinctive architectural light image of each illuminated object, and each plot of urban environment in the evening. In addition, the lamp with a solar panel can often encourage residents to use alternative sources of energy and lead a more environmentally conscious lifestyle.

7.4.2 Ecology. Sustainability.

7.4.2

Solar light Medala combines solar energy, LED technology, long lifespan and a high level of environmental performance with low cost of maintenance and management. Thanks to the durability of the components, robust construction and rare maintenance the street light creates sustainable results with minimal impact on the environment.
The main advantage of solar lights is the use of environmental energy source. But environmental standards are also met by the other elements of the lamp. LED is the most environmentally friendly light source and leaves a minimum carbon footprint [105]. Materials and parts with a high durability are only being used. It ensures a long service life and doesn't require frequent maintenance.
Components of the lamp are optimized in terms of efficiency, the lamp has a high reliability and low operating costs that allows us to say that investments are quickly amortized. Thanks to the constructive solution, the elements of the lantern are independent from each other and can be easily replaced. In this case the body material maintains the design and form of the lamp for a long time. In the future, the elements can be replaced by a new, more efficient counterparts.

7.4.3 Disposal

7.4.3

Recycling is an important life part of any object. All of the elements of the lamp are mounted and are processing. The body of the lamp and the elements are independent objects and are disposed separately from each other. Despite the fact that solar panels are environmentally friendly, the solar cells contain toxic substances, and now there is no fully ecological way of their utilization [106]. Alternatively, it may be considered the secondary market of photo and wind power plants, where the used equipment can find the further application. [107] [108]

8 CONCLUSION

This thesis is focused on the problem of modern street lighting, which is using solar panels. Main aim of the thesis is design development of such device. Direction of developing devices using renewable energies is important today and has a great potential. Designed solar street light meets the modern electronics trends and at the same time uses existing technologies, therefore it provides a possibility of components replacement. This is particularly useful due to rapid development of this technological sector. In the course of design and technical analysis the main endeavour was to find an optimal design and shape solution that could meet market demands, which were formulated during marketing research.

Submitted design option was selected during the multi-stage work and it meets mentioned requirements of efficiency, sustainability and visual appearance. Design section of work includes development of several ways aiming at increasing of efficiency of the solar panel by changing the angle. Mentionable characteristic feature of the solar light Medala is modularity of particular elements, and the ability to rotate the light LED unit in 360 degrees. Thanks to this feature it could illuminate exact location. Modularity of Medala sets the possibility of replacing key parts in a way of simple service maintenance — this increases lifespan of this solar system solution according to the concept of sustainability.

Form of the light is solved in accordance with the modern trends in design and architecture and meets the requirements of functionality in the accordance to technical possibilities of our time.

LIST OF SOURCES

[1] Photovoltaics. Wikipedia. [online]. 4 May 2012 [cit.2015-05-16]. Available from: http://en.wikipedia.org/wiki/Photovoltaics
[2] Quick Facts about Solar Energy. Solarbuzz. [online]. [2015] [cit. 2015-03-10]. Available from: http://www.solarbuzz.com/going-solar/using/quick-facts
[3] 5 Watts LED Solar Street Light 300x300.jpg. Greenlytes. [online]. May 2014 [cit.2015-05-20]. Available from: http://www.greenlytes.com/wp-content/uploads/2014/05/8-Watts-LED-Solar-Street-Light-Night.jpg
[4] Spirit Mast Kaal.jpg. Inhabitat. [online]. 10 October 2013 [cit.2015-05-20]. Available from: http://inhabitat.com/kaal-masten-unveils-the-worlds-first-solarlamp--post/spirit-mast-kaal/
[5] Flowerlights ed01.jpg. Inhabitat. [online]. 26 February 2010 [cit.2015-04-06]. Available from: http://assets.inhabitat.com/wp-content/blogs.dir/1/files/2010/02/flowerlights-ed01.jpg
[6] Rlovegrovesolartreess.jpg. Inhabitat. [online]. 4 October 2007 [cit.2015-04-06]. Available from: http://assets.inhabitat.com/wp-content/blogs.dir/1/files/rlovegrovesolartreess.jpg
[7] Solar Tree Lights. Archello. [online]. [2012] [cit.2015-05-20]. Available from: http://www.archello.com/en/project/solar-tree-lights
[8] Solar Tree.jpg. VINACCIA INTEGRAL DESIGN. [online]. 9 July 2009 [cit.2015-05-20]. Available from: http://vinacciaintegraldesign.blogspot.fr/2009/07/solar-trees.html
[9] FEUERSTEIN, Günther. Biomorphic architecture: Menschen- und Tiergestalten in der Architektur = Human and animal forms in architecture. Stuttgart: Menges, c2002, p.7-17. ISBN 3930698870.
[10] Spotlight Solar at Sandy Grove Middle School.jpg. Wikipedia. [online]. 25 June 2013 [cit.2016-04-16]. Available from: https://en.wikipedia.org/wiki/Solar_tree#/media/File:Spotlight_Solar_at_Sandy_Grove_Middle_School.jpg
[11] 0_1816d4_9955565c_orig.jpg. Livejournal. [online]. 31 October 2014 [cit.2016-04-16]. Available from: https://img-fotki.yandex.ru/get/4611/118032170.ba/0_1816d4_9955565c_orig
[12] Mango light.jpg. TreeHugger. [online]. 21 February 2012 [cit.2015-04-06]. Available from: http://media.treehugger.com/assets/images/2012/02/mangolight.jpg
[13] 1067084.jpg. Interempresas. [online]. 17 April 2015 [cit.2015-05-20]. Available from: http://img.interempresas.net/fotos/1067084.jpeg
[14] Streetlights with solar panel. Biblofond. [online]. 4 May 2003 [cit.2015-10-11]. Available from: http://bibliofond.ru/view.aspx?id=530487
[15] Pace of German solar panel additions slows in 2014. Reuters. [online]. 3 February 2015 [cit.2015-10-09]. Available from: http://www.reuters.com/article/2015/02/03/us-germany-renewables-idUSKBN0L719U20150203
[16] Solar energy: the hope of humanity? Geektimes. [online]. 28 December 2012 [cit.2015-10-09]. Available from: http://geektimes.ru/post/158875/
[17] Solar. Philips Lighting. [online]. 2016 [cit.2016-04-11]. Available from: http://www.lighting.philips.com/main/products/solar.html

[18] Products. Truelite Energy Innovation. [online]. 7 Juny 2015 [cit.2015-10-09]. Available from: http://www.truelite.us/
[19] Specíalní údržba a montáže. SUM. [online]. 10 August 2015 [cit.2015-10-09]. Available from: http://sumenergo.cz/
[20] SPIRIT - LED lighting. KAAL MASTEN. [online]. 8 September 2015 [cit.2015-10-09]. Available from: http://www.kaal.nl/en/LEDlighting
[21] LED Produkty. Visiocom. [online]. 30 September 2015 [cit.2015-10-09]. Available from: http://www.visiocom.cz/
[22] Equipment. Environmental XPRT. [online]. 5 October 2015 [cit.2015-10-09]. Available from: http://environmental-expert.com/
[23] Shop. Greenlytes. [online]. 8 September 2015 [cit.2015-10-09]. Available from: http://www.greenlytes.com/
[24] Torch. LEDSTREET. [online]. 14 November 2012 [cit.2015-10-09]. Available from: http://www.ledstreet.ee/
[25] Outdoor lighting. UGE International Ltd. [online]. 8 October 2012 [cit.2015-10-10]. Available from: http://www.ugei.com/
[26] Blinded By The Sun: How Much Do Solar Panels Really Cost? Forbes. [online]. 26 May 2014 [cit.2015-10-10]. Available from: http://www.forbes.com/sites/williampentland/2014/05/26/blinded-by-the-sun-how-much-do-solar-panels-really--cost/
[27] Strategic analysis of solar lighting market in Almaty. DMG Consult. [online]. 19 September 2013 [cit.2015-10-09].
Available from: http://dmg.kz/files/Strategicheskii_analiz_rinka_osvetitelnih_priborov_na_solnechnih_batareyah.pdf
[28] Germany is faced with the problem of disposing of obsolete wind turbines. Geektimes. [online]. 4 October 2015 [cit.2015-10-11]. Available from: http://geektimes.ru/post/263404/
[29] Renewable Energy Sources in Germany 2013.jpg. Geektimes. [online]. 4 October 2015 [cit.2015-10-11]. Available from: https://habrastorage.org/getpro/geektimes/post_images/625/22b/bfd/62522bbfd08e1e9b1b561b50c482b025.jpg
[30] Blinded By The Sun: How Much Do Solar Panels Really Cost? Forbes. [online]. 26 May 2014 [cit.2015-10-10]. Available from: http://www.forbes.com/sites/williampentland/2014/05/26/blinded-by-the-sun-how-much-do-solar-panels-really--cost/
[31] Rooftop solar panels to lose '£3,840' payout in drastic cull to green subsidies. The Telegraph. [online]. 27 August 2015 [cit.2015-10-11]. Available from: http://www.telegraph.co.uk/finance/personalfinance/energy-bills/11828078/Rooftop-solar--panels-to-lose-3840-payout-in-drastic-cull-to-green-subsidies.html
[32] Street lights powered by solar and wind energy to light up Barcelona. Reuters. [online]. 26 May 2015 [cit.2015-10-11]. Available from: http://www.reuters.com/video/2015/05/26/street-lights-powered-by-solar-and-wind?videoId=364356103
[33] Pace of German solar panel additions slows in 2014. Reuters. [online]. 3 February 2015 [cit.2015-10-09]. Available from: http://www.reuters.com/article/2015/02/03/us-germany-renewables-idUSKBN0L719U20150203
[34] Solar energy. International Network for Sustainable Energy. [online]. 29 July 2015 [cit.2015-10-11]. Available from: www.ecomuseum.kz/dieret/solar/solar.Html

[35] SZAKONYI, David, URPELAINEN, Johannes. Solar power for street vendors? Problems with centralized charging stations in urban market. Habitat International. 2016, vol. 53, p.228-236. DOI: 10.1016/j.habitatint.2015.11.008. Available from: http://www.sciencedirect.com/science/article/pii/S0197397515002477
[36] Zambia country report 2014. Sunnymoney. [online]. 2014 [cit.2015-10-11]. Available from: http://www.sunnymoney.org/assets/Uploads/PDFs/Zambia-report-2014-1.pdf
[37] Solar Lamps Foeld Test Uganda. Energypedia. [online]. July 2011 [cit.2015-10-11]. Available from: https://energypedia.info/images/7/72/GIZ_Solar_Lamps_field_Report_Uganda_Webversion.pdf
[38] EU support for photovoltaics. European Commission. [online]. 11 August 2015 [cit.2016-04-16]. Available from: http://ec.europa.eu/research/energy/eu/index_en.cfm?pg=research-photovoltaics-support
[39] DE SANTI, G., JAEGER WALDAU, A.,TAYLOR, N., OSSENBRINK, H. Realizing solar power's potential in the European Union. Phil. Trans. R. Soc. A. 1 July 2013, vol.371. DOI: 10.1098/rsta.2012.0391. Available from: http://rsta.royalsocietypublishing.org/content/371/1996/20120391
[40] LED lighting project. City of Sydney. [online]. 8 December 2015 [cit.2016-04-18]. Available from: http://www.cityofsydney.nsw.gov.au/vision/towards-2030/sustainability/carbon-reduction/led-lighting-project
[41] Rooftop solar panels to lose '£3,840' payout in drastic cull to green subsidies. The Telegraph. [online]. 27 August 2015 [cit.2015-10-11]. Available from: http://www.telegraph.co.uk/finance/personalfinance/energy-bills/11828078/Rooftop-solar--panels-to-lose-3840-payout-in-drastic-cull-to-green-subsidies.html
[42] Streetlight with Solar Panel. Alibaba. [online]. 11 October 2015 [cit.2015-10-11]. Available from: http://www.alibaba.com/trade/search?fsb=y&IndexArea=product_en&CatId=&SearchText=streetlight+with+solar+panel
[43] Solar energy in Russia is powered by Quantum of Solace. Membrana. [online]. 15 August 2011 [cit.2015-10-11]. Available from: http://www.membrana.ru/particle/16579/
[44] Timeline of solar cells. Wikipedia. [online]. 29 April 2016 [cit.2016-05-10]. Available from: https://en.wikipedia.org/wiki/Timeline_of_solar_cells
[45] Solar powered street lighting system [patent]. Patent, US 4200904 A. Granted 1978. Available from: http://www.google.com/patents/US4200904
[46] Solar-powered light pole and LED light fixture [patent]. Patent, US 7731383 B2. Granted 2010. Available from: http://www.google.com/patents/US7731383
[47] Solar energy street lamp structure with adjustable angle [patent]. Patent, US 8066399 B2. Granted 2011. Available from: http://www.google.com/patents/US8066399
[48] Solar powered rechargeable street light with tamper resistant networkable system [patent]. Patent, US 7976180 B1. Granted 2011. Available from: https://www.google.com/patents/US7976180
[49] US4200904-1.png. Google. [online]. 29 November 2011 [cit.2016-04-13]. Available from: http://patentimages.storage.googleapis.com/pages/US4200904-1.png
[50] US07731383-20100608-D00001.png. Google. [online]. 8 Juny 2010 [cit.2016-04-13]. Available from: http://patentimages.storage.googleapis.com/US7731383B2/US07731383-20100608-D00001.png

[51] US08066399-20111129-D00003.png. Google. [online]. 29 November 2011 [cit.2016-04-13]. Available from: http://patentimages.storage.googleapis.com/US8066399B2/US08066399-20111129-D00003.png
[52] Solar street light. Wikipedia. [online]. 12 July 2011 [cit.2015-05-16]. Available from: http://en.wikipedia.org/wiki/Solar_street_light
[53] 3 Types of Solar Street Light Systems. GENPRO Energy Solutions. [online]. 16 June 2014 [cit.2016-03-18]. Available
From: http://www.genproenergy.com/genpro-energy-blog/3-types-of-solar-streetlight-systems.html
[54] LIU, Gang. Sustainable feasibility of solar photovoltaic powered street lighting systems. International Journal of Electrical Power & Energy Systems. 2014, vol.56, p. 168-174. DOI: doi:10.1016/j.ijepes.2013.11.004. Available from: http://www.sciencedirect.com/science/article/pii/S0142061513004626
[55] Solar panels: how it works? Hotline. [online]. 5 August 2014
[cit.2015-11-15]. Available from: http://itc.ua/articles/solnechnyie-batarei-kak-eto-rabotaet/
[56] Photovoltaic materials, history, status and outlook. Science Direct. [online]. 21 November 2002 [cit.2015-11-15]. Available from: http://www.sciencedirect.com/science/article/pii/S0927796X0200092X
[57] Typical solar cell.jpg. Science Direct. [online]. 21 November 2002
[cit.2015-11-15]. Available from: http://ars.els-cdn.com/content/image/1-s2.0--S0927796X0200092X-gr1.jpg
[58] Solar cell and solar panel device. Greens. [online]. 28
February 2012 [cit.2015-11-17]. Available from: http://zeleneet.com/solnechnaya-batareya-ustrojstvo-solnechnoj-batarei/1043/
[59] Monocrystalline silicon.jpg. SolarSystem. [online]. 22 December 2014
[cit.2015-11-17]. Available from: http://solarsistem.ru/image/solar_panel_parametri/002.jpg
[60] Polycrystalline silicon.jpg. SolarSystem. [online]. 22 December 2014 [cit.2015-11-17]. Available from: http://solarsistem.ru/image/solar_panel_parametri/003.jpg
[61] Thin layer silicon.jpg. SolarSystem. [online]. 22 December 2014 [cit.2015-11-17]. Available from: http://solarsistem.ru/image/solar_panel_parametri/004.jpg

[62] Translucent Li-ion Battery Charges Itself by Using Sunlight. Nikkei technology. [online]. 1 September 2015 [cit.2016-03-18]. Available from: http://techon.nikkeibp.co.jp/atclen/news_en/15mk/090100006/
[63] Kirigami-inspired solar cells can track the sun without motors. Engadget. [online]. 9 November 2015 [cit.2016-01-15]. Available from: http://www.engadget.com/2015/09/11/kirigami-inspired-solar-cells-can-track-the-sun-without-motors/
[64] V3Solar's spinning solar cells generate 20 times more electricity than flat photovoltaics. Inhabitat. [online]. 19 June 2015 [cit.2016-01-15]. Available from: http://inhabitat.com/v3solars-photovoltaic-spin-cell-cones-capture-sunlight-all-day-long/
[65] A Municipal Guide for Converting to LED Street Lighting. Leotek. [online]. 16 October 2013 [cit.2015-11-20]. Available from: http://www.leotek.com/education/documents/Leotek.LED.Streetlight.Guide.V7-101613.pdf
[66] LED Performance Over Time.jpg. Onsemi. [online]. 10 May 2014 [cit.2015-05-20]. Available from: http://www.onsemi.com/pub_link/Collateral/TND346-D.jpg
[67] Outdoor Streetlight.jpg. Allfresco. [online]. May 2014 [cit.2015-11-20]. Available

from: http://www.allfresco.ru/item/103.jpg
[68] Different Types.jpg. EERE Home. [online]. 19 September 2005 [cit.2015-11-20]. Available from: http://www.eere.energy.gov/consumer/your_home/electricity/index.cfm/mytopic=10640.jpg
[69] Solar Powered LED Street Lighting. On Semiconductor. [online]. 2013 [cit.2016-01-12]. Avalable from: http://www.onsemi.com/pub_link/Collateral/TND346-D.PDF
[70] Reauirements for streetlight. Indeokight. [online]. 2015 [cit.2015-01-18]. Available from: http://indeolight.com/obekty-osveshheniya/naruzhnoe/ulichnoe/ulichnoe--osveshhenie-na-stolbah.html
[71] High Lumen Solar 5w.jpg. Alibaba. [online]. May 2013 [cit.2015-11-20]. Available from: http://www.alibaba.com/product-detail/High-lumen-solar-5w-12w--22w_60243870069.jpg
[72] Lithium-Ion Batteries for Electric Vehicles. Home Power. [online]. May 2013 [cit.2016-04-12]. Available from: http://www.homepower.com/articles/vehicles/project-profiles/lithium-ion-batteries--electric-vehicles?v=print
[73] MORRIS, Richard. The fundamentals of product design. Lausanne: AVA, c2009. ISBN 978-2-940373-17-8.
[74] 23ddf1b7270f1614a19c9f0bfefe2ea0.jpg. Pinterest. [online]. 2015 [cit.2016-05-02]. Available from: https://s-media-cache-ak0.pinimg.com/564x/23/dd/f1/23ddf1b-7270f1614a19c9f0bfefe2ea0.jpg
[75] ČSN EN 13201. Osvětlení pozemních komunikací. Praha: Český normalizační institut, 2005.
[76] CEN/TR 13201-1. Road lighting - Part 1: Selection of lighting classes. Brussel: European Committee for Standardization, 2004.
[77] ZHANG, Peng, ZHOU, Gondbo, ZHU, Zhencai. Numerical study on the properties of an active sun tracker for solar streetlight. Mechatronics. December 2013, vol. 23, issue 8, . 1215-1222. DOI: 10.1016/j.mechatronics.2013.08.007. Available from: http://www.sciencedirect.com/science/article/pii/S0957415813001578
[78] Optimum Tilt of Solar Panels. Solar Panel Tilt. [online]. 2011 [cit.2015-04-12]. Available from: http://www.solarpaneltilt.com/
[79] Graph1.jpg. Solar Panel Tilt. [online]. 2011 [cit.2015-04-12]. Available from: http://www.solarpaneltilt.com/graph1.jpg
[80] Optsolargraph.jpg. Solar Panel Tilt. [online]. 2011 [cit.2015-04-12]. Available from: http://www.solarpaneltilt.com/optsolargraph.jpg
[81] Performance of Grid-connected PV. European Commission. [online]. 2016 [cit.2016-03-15]. Available from: http://re.jrc.ec.europa.eu/pvgis/apps4/pvest.php?#
[82] Jaw joint.jpg. 300 mm. [online]. 1998 [cit.2016-03-15]. Available from: http://www.300mm.ru/mm/086-255.png
[83] Time of organic architecture. Forma. [online]. 2005 [cit.2016-02-15]. Available from: http://www.forma.spb.ru/magazine/articles/d_0010/main.shtml
[84] YELMEN, Bekir, CAKIR, Tarik. Influence of temperature changes in various regions of Turkey on powers of photovoltaic solar panels. Energy Sources, Part A: Recovery, Utilization, and Environmental Effects. February 2016, vol.38, issue 4, p.542-550. DOI: 10.1080/15567036.2011.551925. Available from: http://www.tandfonline.com/doi/full/10.1080/15567036.2011.551925
[85] Outdoor Lighting. IGuzzini. [online]. 2016 [cit.2016-04-16]. Available from: http://www.iguzzini.com/outdoor-lighting/

[86] REIJENGA, T. H. PV in Architecture. Handbook of Photovoltaic Science and Engineering. January 2015, p.1036-1037. DOI: 10.1002/0470014008. Available from: http://onlinelibrary.wiley.com/doi/10.1002/0470014008.ch22/pdf
[87] Country alley use 40w street light solar. Alibaba. [online]. 2016 [cit.2016-05-15]. Available from: http://www.alibaba.com/product-detail/Country-alley-use-40w-street-light_60352527531.html?spm=a2700.7724838.0.0.hHVY2d
[88] RISING 60W Polycrystalline Solar Panel. Amazon. [online]. 2016 [cit.2016-05-15]. Available from: http://www.amazon.com/RISING-60W-Polycrystalline-Solar-Panel/dp/B00C58JWBI?&tag=rnwap-20
[89] Rechargeable lifepo4. Alibaba. [online]. 2015 [cit.2016-05-15]. Available from: http://www.alibaba.com/product-detail/Rechargeable-lifepo4-26650-4S10P-lithium--12v_60394338104.html?spm=a2700.7724857.29.21.ygZ04j&s=p
[90] Controller. Avtonom. [online]. 2016. [cit.2016-05-15]. Available from: http://avtonom.com.ua/stati/towari_alternativnoy_energetiki/kontroleri/zachem-nuzhny-kontrollery-dlja-solnechnyh-batarej
[91] MPPT Solar Charge Controller. Alibaba. [online]. 2016 [cit.2016-05-15]. Available from: http://wholesaler.alibaba.com/product-detail/CE-RoHS-30A-12V-24V-MPPT_60145326153.html?spm=a2700.7724857.29.166.PQhnYa
[92] LED module ST IP G1 3700-730-4S. Osram. [online]. 2016 [cit.2016-05-15]. Available from: http://www.osram.com/osram_com/products/led-technology/light--engines-and-modules/outdoor-and-street-lighting/streetlight-ip/index.jsp
[93] Technical application guide. Osram. [online]. 2016 [cit.2016-05-15]. Available from: http://www.osram.com/media/resource/hires/510670/technical-application-guide-streetlight-ip-g1--gb.pdf
[94] RUBÍNOVÁ, Dana. Metodika zahrnutí ergonomických aspektů do designérského návrhu. Brno, 2002. Dostupné z: http://dl.uk.fme.vutbr.cz/zobraz_soubor.php?id=488. Disertační práce. Vysoké učení technické v Brně.
[95] Public Lighting in Cities. Atkitektur. [online]. 2014 [cit.2015-05-04]. Available from: http://mpe.arkitektur.lth.se/fileadmin/miljopsykologi/images/pdf_filer/light_and_colour._litteratur_Raynham.pdf
[96] Kelvin_J-SM-483x580.jpg. Luxume. [online]. 2015 [cit.2015-05-15]. Available from: http://www.luxemozione.com/gaianorm/2014/12/Kelvin_J-SM-483x580.jpg
[97] New hybrid solar cells generate 5 times more energy by harnessing sunlight and heat at the same time. Inhabitat. [online]. 14 September 2015 [cit.2015-05-15]. Available from: http://inhabitat.com/new-hybrid-solar-cells-generate-5-times-as-much-energy-by-harnessing-suns-light-and-heat-at-the-same-time/
[98] NORMAN, Donald A. Emotional design: why we love (or hate) everyday things. New York: BasicBooks, 2005. ISBN 0-465-05136-7.
[99] PAINTER, K. A., FARRINGTON, D. P.. The financial benefits of improved street lighting based on crime reduction. Lighting Research and Technology. 2001, vol.33, issue 1, p.3-12
[100] RAYNHAM, P., GARDENER, C. Urban Lights: Sustainable Urban Lighting for Town Centre Regeneration. Lux Europa. 2001, vol.5, issue 2, p.81-84.
[101] When (and Where) Solar LED Lighting Makes Sense. Forbes. [online]. 11 February 2014 [cit.2016-04-16]. Availavle from: http://www.forbes.com/sites/heatherclancy/2014/02/11/when-and-where-solar-led-lighting-makes-sense/#26cea4b518db
[102] Solární elektrárna. Pedagogická fakulta MU. [online]. 21 May 2016 [cit.2016-05-21]. Available from: http://www.ped.muni.cz/o-fakulte/solarni-elektrarna

[103] GetChart.png. Pedagogická fakulta MU. [online]. 21 May 2016 [cit.2016-05-21]. Available from: https://www.solarweb.com/Addon/GetChart?token=9e6636a7--abc7-47fe-97ca-a56200bfae6b
[104] Light design. MT Electro. [online]. 27 October 2011 [cir.2016-04-18]. Abailable from: http://mtelectro.ru/blog/svetovoj_dizajn_goroda
[105] Lightdesign. Light Russia. [online]. 27 January 211 [cit.2016-04-18]. Available from: http://subscribe.ru/group/vse-o-svete-i-svetodizajne/1502810/
[106] Recycling of solar panel. Young Scientist. [online]. 2014 [cit.2016-05-10]. Available from: http://www.moluch.ru/archive/70/11987/
[107] Mounting of solar panel. Rodovid. [online]. 14 November 2013 [cit.2016-05-10]. Available from: http://rodovid.me/solar_power/ustanovka-solnechnyh-batarey--6-faktorov-kotorye-sleduet-uchest.html
[108] PAPANEK, Victor J. Design for the real world: human ecology and social change. [1st American ed.]. New York: Pantheon Books, 1971, p.273. ISBN 0394470362.

LIST OF PICTURES

LIST OF ATTACHMENTS

Attachment – small versions of posters (A4)
Photodocumentation of 3D printed model
Separate attachement (posters A1, model)

T

Great capability

MEDALA is a modular system in which the solar units and light modules in as separate modules. Due to the mobility of the frame with respect to the column, the light source may occupy any position and be accurately directed to the place of light.

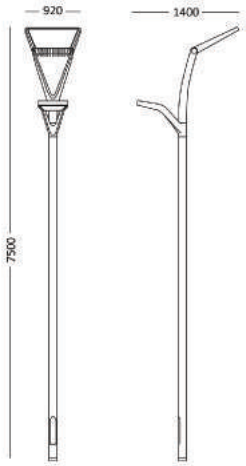

Specification

Lighting situation D3 (E1)
solar panel polycrystalline silicon 12V60W (1)
battery Li-ion 12V/30AH (4)
charge controller MPPT 12/24V (3)
LED Lamp 40W (2)
movement sensor (5) light sensor (6)

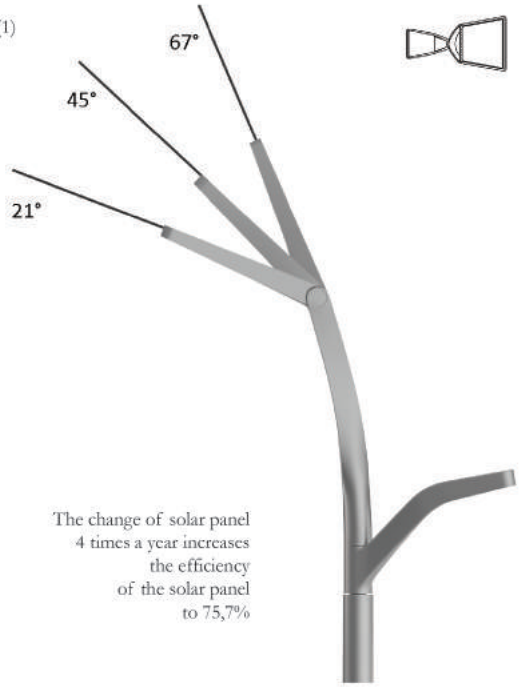

The change of solar panel
4 times a year increases
the efficiency
of the solar panel
to 75,7%

Ing. Dinara Bulatova
Technic poster

Tema: Design of Street Lamp with Solar Power
Supervisor: MgA. David Korásek
Date of defence: June 2016

Brno University of Technology
Faculty of Mechanical Engineering
Institute of Machine and Industrial Design
Industrial Design

Institute of Machine and Industrial Design

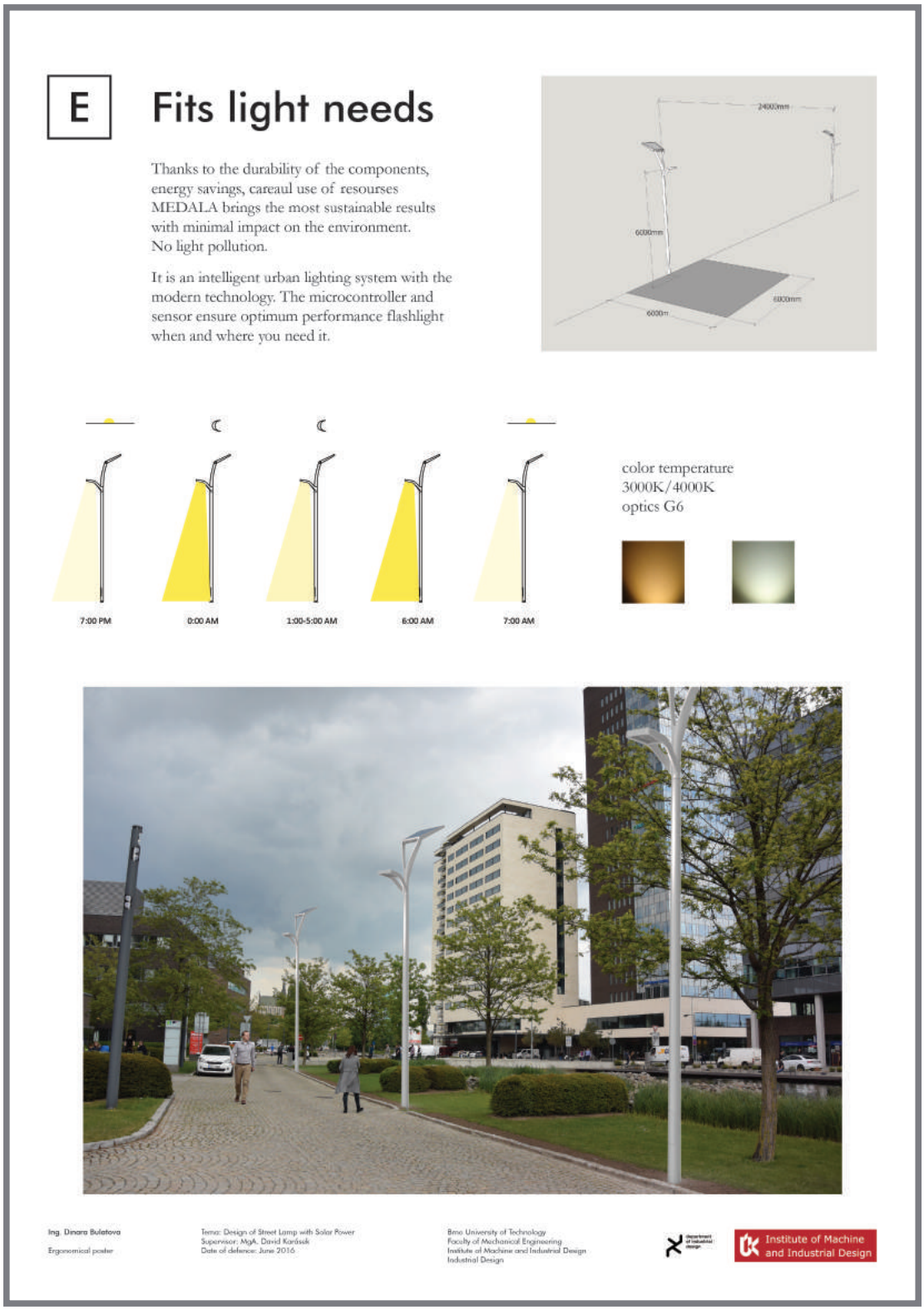
E
Fits light needs
Thanks to the durability of the components, energy savings, careaul use of resourses MEDALA brings the most sustainable results with minimal impact on the environment. No light pollution.
It is an intelligent urban lighting system with the modern technology. The microcontroller and sensor ensure optimum performance flashlight when and where you need it.
24000mm
6000mm
6000mm
6000m
7:00 PM
0:00 AM
1:00-5:00 AM
6:00 AM
7:00 AM
color temperature
3000K/4000K
optics G6
Ing. Dinara Bulatova
Ergonomical poster
Tema: Design of Street Lamp with Solar Power
Supervisor: MgA. David Karásek
Date of defence: June 2016
Brno University of Technology
Faculty of Mechanical Engineering
Institute of Machine and Industrial Design
Industrial Design
Institute of Machine and Industrial Design

P MEDALA solar street lamp

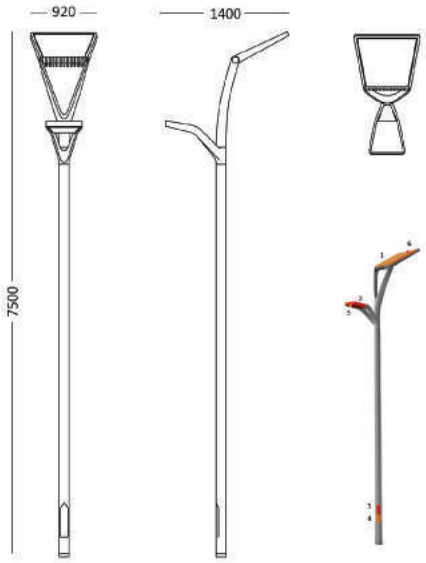

The MEDALA combines solar energy, LED technology, long lifespan and a high level of environmental performance with low cost of maintenance and management.

solar panel polycrystalline silicon 12V60W (1) LED Lamp 40W (2) battery Li-ion 12V/30AH (4) charge controller MPPT 12/24V (3) movement sensor (5) and light sensor (6)

Ing. Dinara Bulatova
Presentation poster

Tema: Design of Street Lamp with Solar Power
Supervisor: MgA. David Karásek
Date of defence: June 2016

Brno University of Technology
Faculty of Mechanical Engineering
Institute of Machine and Industrial Design
Industrial Design

Institute of Machine and Industrial Design

D Lighting changes space

The lamp combines form and function. The innovative design and high quality materials create a unique look. LED light creates the right atmosphere for road users and pedestrians.

The lantern has a single color - it give accent to the shape. Soft lines inspired by nature emphasizes ecological quality of the street light.

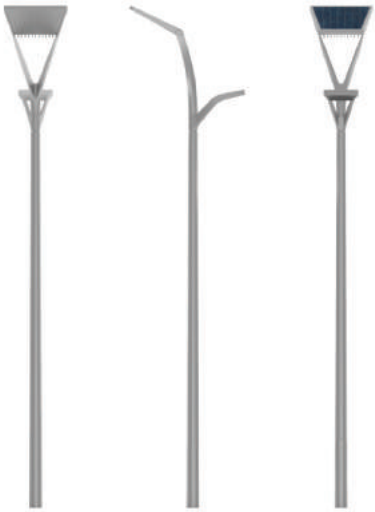

Ing. Dinara Bulatova

Design poster

Tema: Design of Street Lamp with Solar Power
Supervisor: MgA. David Karásek
Date of defence: June 2016

Brno University of Technology
Faculty of Mechanical Engineering
Institute of Machine and Industrial Design
Industrial Design

Institute of Machine and Industrial Design